Sales Code: ARL-ETT01A **Barcode:** 5056474596292 **Brand:** Arley Pro **Description:** Arley Pro Ettore Close Coupled Short Projection Toilet



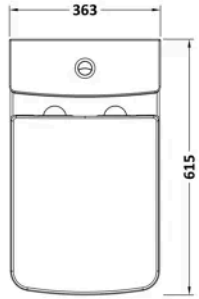

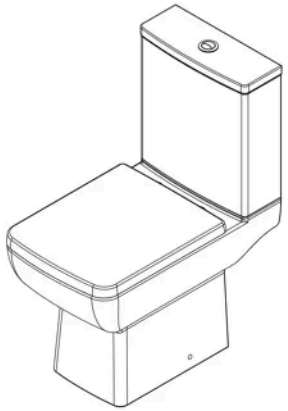



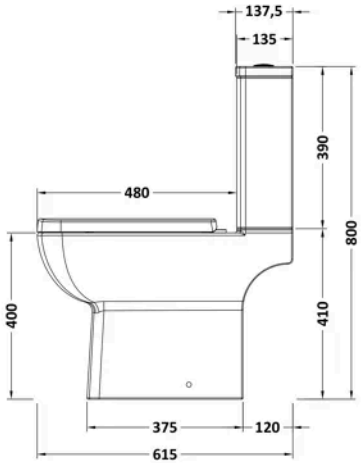

Product Dimensions

Product	800 x 363 x 615mm (H x W x D)
Packaged	435 x 770 x 420mm (H x W x D)
Nett Weight	45.67 kg
Packaged Weight	45.67 kg

Packaging Details

Box Qty	3

Product Details

Country of Origin	China
Product Material	Vitreous China
Colour/Finish	White
Style	Contemporary
Ce Certified	Yes
Cistern Fittings	Loose 6/3L
Cistern Lever Type	Plastic Chrome Plated
Flush Operating Type	Push Button
Hinge Centres (Min)	115 mm
Includes Seat	Yes
Pan Trap Style	P-Trap
Pan Type	Open To Wall
Toilet Seat Type	D Shape

© ROXOR Group

Sales Code: ARL-ETT01 **Barcode:** 5056474596193 **Brand:** Arley Pro **Description:** Missing Title



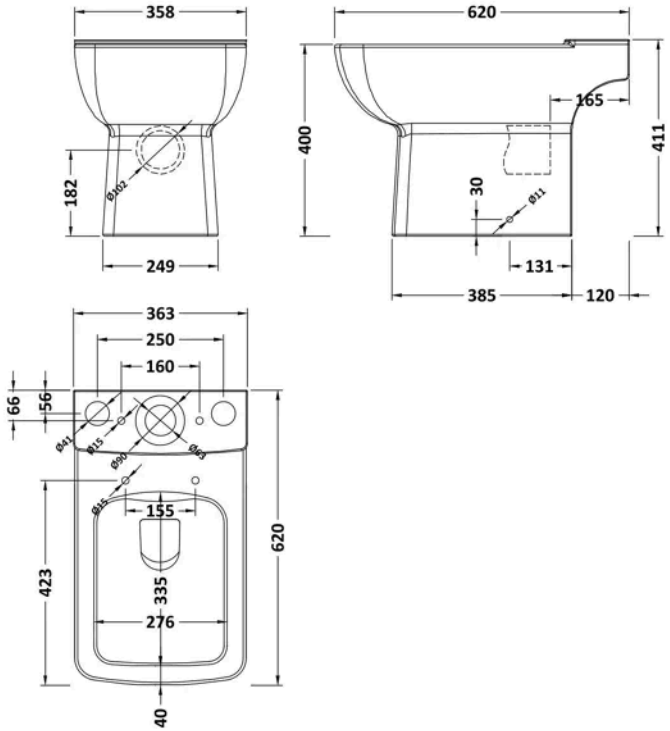

Product Dimensions

Packaged	425 x 635 x 435mm (H x W x D)
Nett Weight	29 kg
Packaged Weight	30 kg

Packaging Details

Box Qty	1

Product Details

Country of Origin	China
Product Material	Vitreous China
Colour/Finish	White
Style	Contemporary
Ce Certified	Yes
Includes Seat	No
Pan Trap Style	P-Trap
Pan Type	Open To Wall

© ROXOR Group

Sales Code: ARL-ETT02 **Barcode:** 5056474596209 **Brand:** Arley Pro **Description:** Missing Title



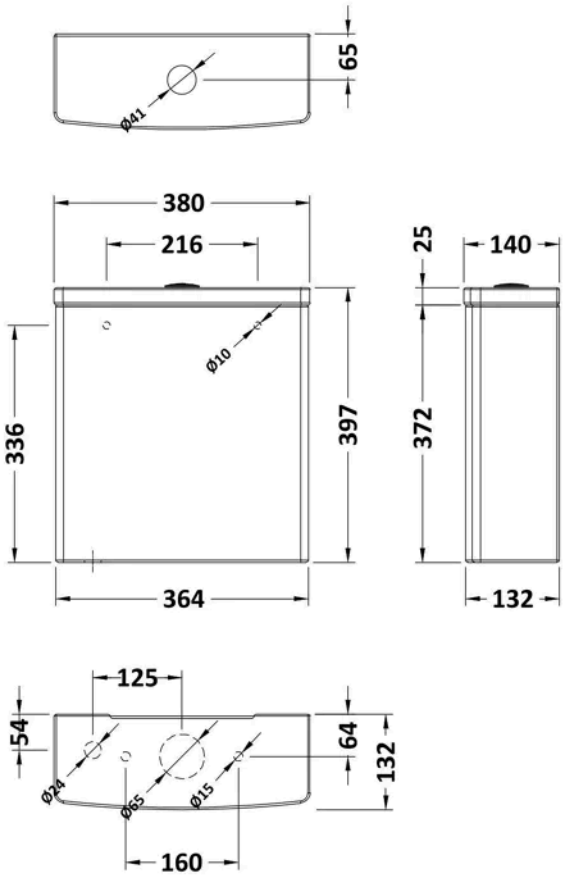

Product Dimensions

Packaged	165 x 390 x 410mm (H x W x D)
Nett Weight	11.53 kg
Packaged Weight	13 kg

Packaging Details

Box Qty	1

Product Details

Country of Origin	China
Product Material	Vitreous China
Colour/Finish	White
Style	Contemporary
Ce Certified	Yes

© ROXOR Group

Sales Code: ARL-ETTST **Barcode:** 5056474596216 **Brand:** Arley Pro **Description:** Missing Title



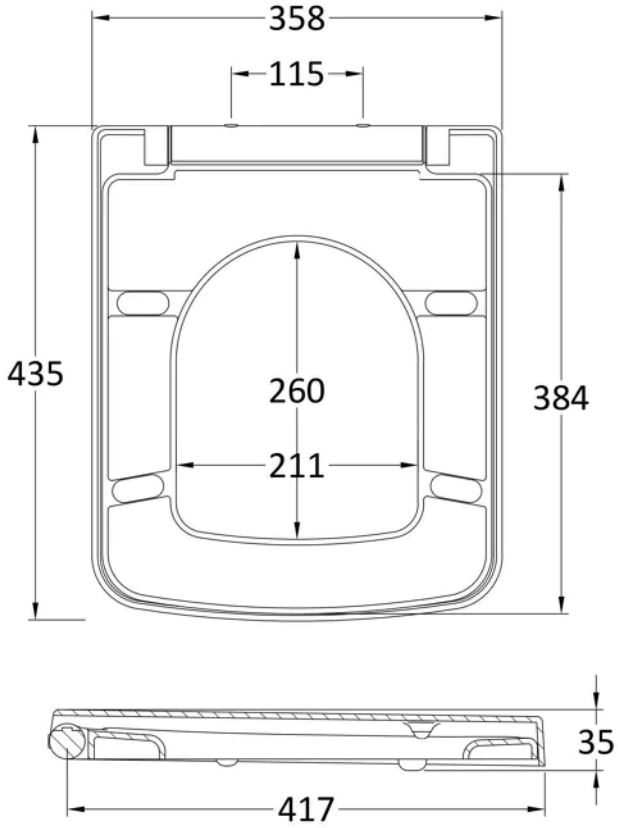

Product Dimensions

Product	53 x 358 x 435mm (H x W x D)
Packaged	60 x 380 x 460mm (H x W x D)
Outer Box	390mm (H)
Nett Weight	2.12 kg
Packaged Weight	2.67 kg

Packaging Details

Box Qty	1
Label Size (mm)	50 x 100

Product Details

Country of Origin	China
Product Material	Stainless Steel Nylon,Urea
Colour/Finish	White
Style	Contemporary
Fixings Included	Yes
Ce Certified	No
Declaration Of Performance	No
Hinge Centres (Min)	115 mm
Toilet Seat Function	Soft Close
Toilet Seat Hinge Type	Quick Release
Toilet Seat Type	D Shape

© ROXOR Group