Sales Code: ARL-CL2TBA **Barcode:** 5056474596179 **Brand:** Arley Pro **Description:** Arley Pro Classic 600mm 2 Tap Hole Ceramic Basin & Pedestal



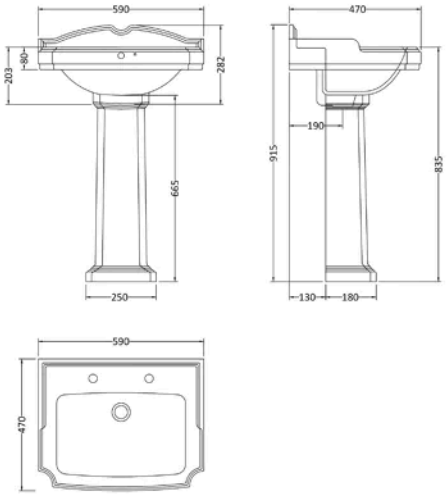

Product Dimensions

Product	915 x 590 x 470mm (H x W x D)
Packaged	550 x 550 x 550mm (H x W x D)
Nett Weight	30.4 kg
Packaged Weight	30.4 kg

Product Details

Country of Origin	China
Product Material	Vitreous China
Colour/Finish	White
Mount Type	Floor
Style	Traditional
Fixings Included	No
Ce Certified	Yes
Inner Bowl Depth	290 mm
Inner Bowl Height	165 mm
Inner Bowl Width	590 mm
No. Of Tapholes	2
Number Of Bowls	1
Overflow Cover Included	Yes
Overflow Included	Yes
Tap Included	No
Waste Included	No

© ROXOR Group

Sales Code: ARL-CL2TB **Barcode:** 5056474596131 **Brand:** Arley Pro **Description:** Missing Title



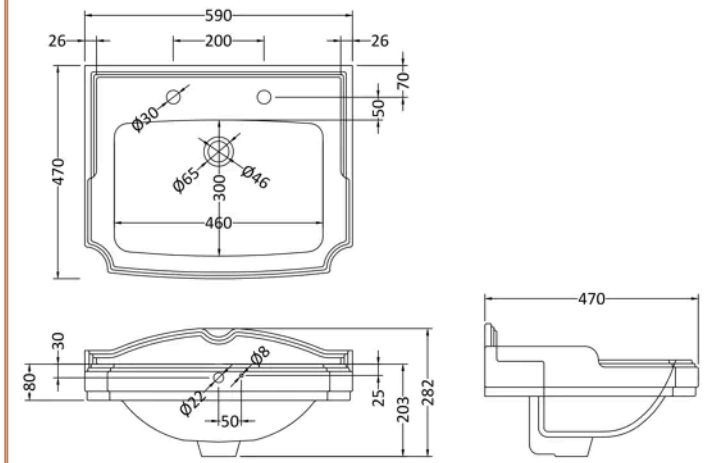

Product Dimensions

Product	280 x 590 x 470mm (H x W x D)
Packaged	290 x 510 x 590mm (H x W x D)
Nett Weight	18.54 kg
Packaged Weight	19.2 kg

Product Details

Country of Origin	China
Product Material	Vitreous China
Colour/Finish	White
Ce Certified	Yes
Inner Bowl Height	165 mm
No. Of Tapholes	2
Number Of Bowls	1

© ROXOR Group

Sales Code: ARL-CLPED **Barcode:** 5056474596124 **Brand:** Arley Pro **Description:** Classic Legend Pedestal



Technical Drawing Not Available

Product Dimensions

Packaged	700 x 180 x 280mm (H x W x D)
Nett Weight	11.2 kg
Packaged Weight	11.2 kg

Product Details

Country of Origin	China
Product Material	Vitreous China
Colour/Finish	White

© ROXOR Group