Sales Code: ARL-BAS5 **Barcode:** 5056474596506 **Brand:** Arley Pro **Description:** Arley Pro BIAB Original 450mm 1 Tap Hole Wall Hung Ceramic Basin



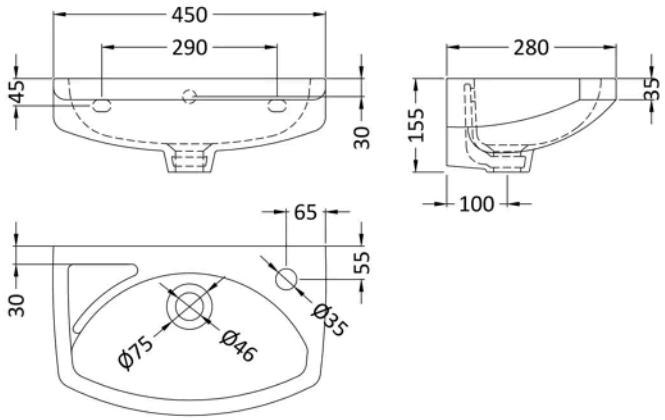

Product Dimensions

Product	155 x 450 x 280mm (H x W x D)
Packaged	165 x 460 x 300mm (H x W x D)
Nett Weight	8.3 kg
Packaged Weight	8.5 kg

Packaging Details

Box Qty	1

Product Details

Country of Origin	Turkey
Product Material	Vitreous China
Colour/Finish	White
Style	Contemporary
Fixings Included	Yes
Ce Certified	Yes
Inner Bowl Depth	205 mm
Inner Bowl Height	110 mm
Inner Bowl Width	380 mm
No. Of Tapholes	1
Number Of Bowls	1
Overflow Cover Included	Yes
Overflow Included	Yes
Tap Included	No
Waste Included	No

© ROXOR Group