Sales Code: ARL-BAS1 **Barcode:** 5056474596469 **Brand:** Arley Pro **Description:** Arley Pro BIAB Original 450mm 1 Tap Hole Wall Hung Ceramic Corner Basin



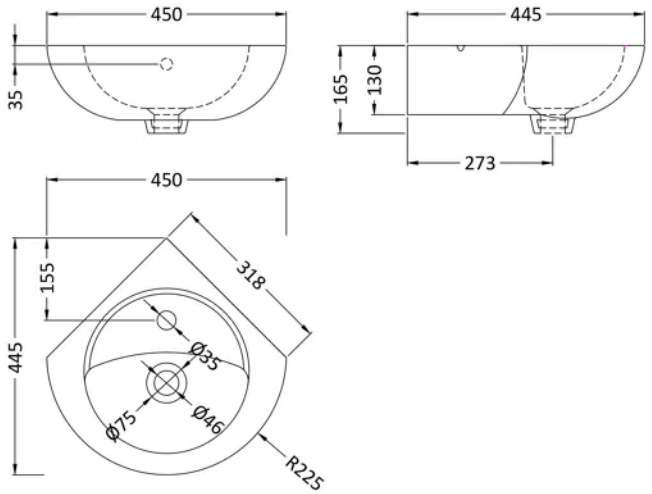

Product Dimensions

Product	165 x 450 x 445mm (H x W x D)
Packaged	222 x 390 x 390mm (H x W x D)
Nett Weight	9.8 kg
Packaged Weight	10 kg

Packaging Details

Box Qty	1

Product Details

Country of Origin	Turkey
Product Material	Vitreous China
Colour/Finish	White
Style	Contemporary
Ce Certified	Yes
Inner Bowl Depth	195 mm
Inner Bowl Height	115 mm
Inner Bowl Width	300 mm
No. Of Tapholes	1
Number Of Bowls	1
Overflow Included	Yes
Tap Included	No
Waste Included	No

© ROXOR Group