Sales Code: ARL-AZA04A **Barcode:** 5056474596438 **Brand:** Arley Pro **Description:** Arley Pro Azara Round Back to Wall Toilet Pan With Seat



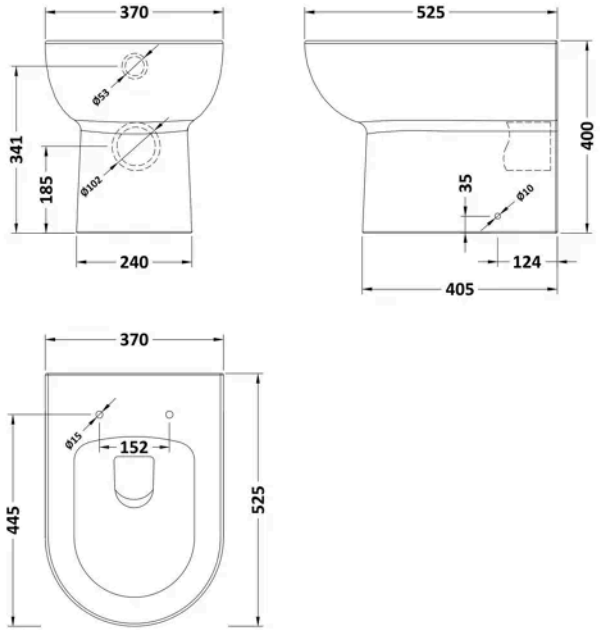

Product Dimensions

Product	400 x 370 x 525mm (H x W x D)
Packaged	420 x 400 x 535mm (H x W x D)
Nett Weight	27.34 kg
Packaged Weight	27.34 kg

Product Details

Country of Origin	China
Product Material	Urea,Vitreous China
Colour/Finish	White
Style	Contemporary
Ce Certified	Yes
Hinge Centres (Max)	175 mm
Hinge Centres (Min)	70 mm
Includes Seat	Yes
Pan Trap Style	P-Trap
Pan Type	Back To Wall
Toilet Seat Type	D Shape

© ROXOR Group

Sales Code: ARL-AZA04 **Barcode:** 5056474596377 **Brand:** Arley Pro **Description:** Missing Title



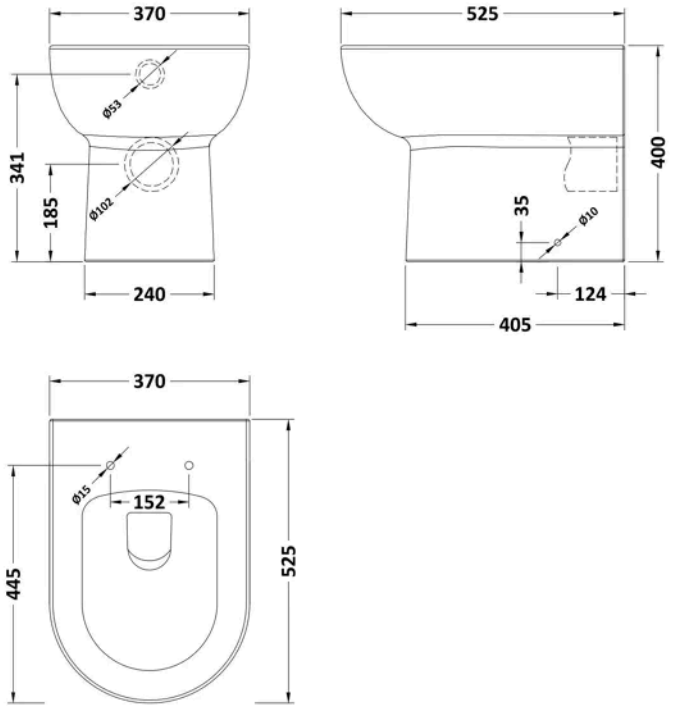

Product Dimensions

Product	400 x 370 x 525mm (H x W x D)
Packaged	420 x 400 x 535mm (H x W x D)
Nett Weight	24.5 kg
Packaged Weight	25 kg

Packaging Details

Box Qty	1

Product Details

Country of Origin	China
Product Material	Vitreous China
Colour/Finish	White
Style	Contemporary
Ce Certified	Yes
Includes Seat	No
Pan Trap Style	P-Trap
Pan Type	Back To Wall

© ROXOR Group

Sales Code: ARL-AZAST **Barcode:** 5056474596353 **Brand:** Arley Pro **Description:** Missing Title



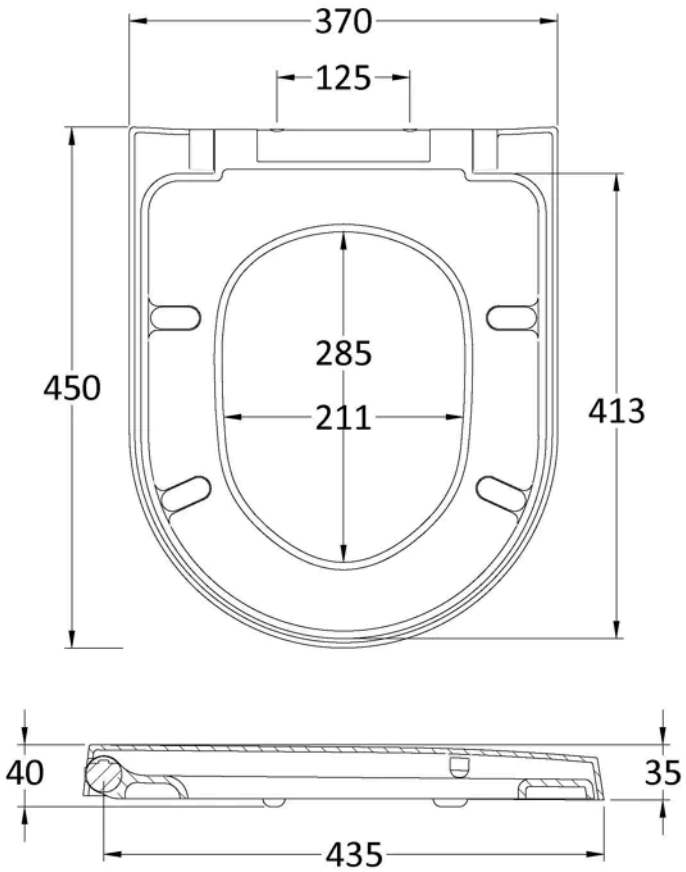

Product Dimensions

Product	40 x 370 x 450mm (H x W x D)
Packaged	377 x 50 x 469mm (H x W x D)
Outer Box	395mm (H)
Nett Weight	2.12 kg
Packaged Weight	2.3 kg

Packaging Details

Box Qty	1
Label Size (mm)	50 x 100

Product Details

Country of Origin	China
Product Material	Stainless Steel Nylon,Urea
Colour/Finish	White
Style	Contemporary
Fixings Included	Yes
Ce Certified	No
Declaration Of Performance	No
Hinge Centres (Max)	175 mm
Hinge Centres (Min)	70 mm
Toilet Seat Function	Soft Close
Toilet Seat Hinge Type	Quick Release
Toilet Seat Type	D Shape

© ROXOR Group