Sales Code: ARL-AZA01A **Barcode:** 5056474596414 **Brand:** Arley Pro **Description:** Arley Pro Azara Close Coupled Short Projection Toilet



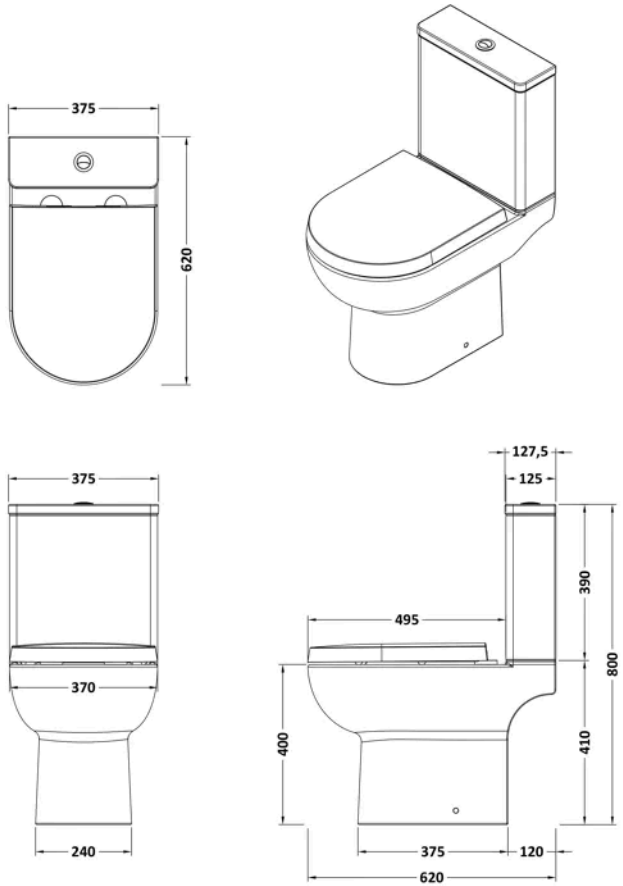

Product Dimensions

Product	800 x 375 x 620mm (H x W x D)
Packaged	435 x 770 x 420mm (H x W x D)
Nett Weight	43.04 kg
Packaged Weight	43.04 kg

Packaging Details

Box Qty	3

Product Details

Country of Origin	China
Product Material	Polypropylene
Colour/Finish	White
Style	Contemporary
Ce Certified	Yes
Hinge Centres (Max)	175 mm
Hinge Centres (Min)	70 mm
Includes Seat	Yes
Pan Trap Style	P-Trap
Pan Type	Open To Wall
Toilet Seat Type	D Shape

© ROXOR Group

Sales Code: ARL-AZA01 **Barcode:** 5056474596339 **Brand:** Arley Pro **Description:** Missing Title



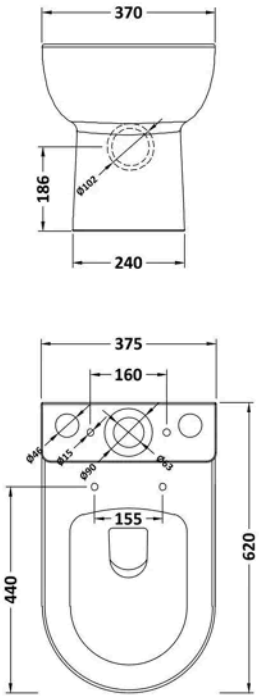

Product Dimensions

Packaged	700 x 440 x 440mm (H x W x D)
Nett Weight	26.7 kg
Packaged Weight	26.7 kg

Packaging Details

Box Qty	1

Product Details

Country of Origin	China
Colour/Finish	White
Style	Contemporary
Ce Certified	Yes
Pan Trap Style	P-Trap
Pan Type	Open To Wall

© ROXOR Group

Sales Code: ARL-AZA02 **Barcode:** 5056474596346 **Brand:** Arley Pro **Description:** Missing Title



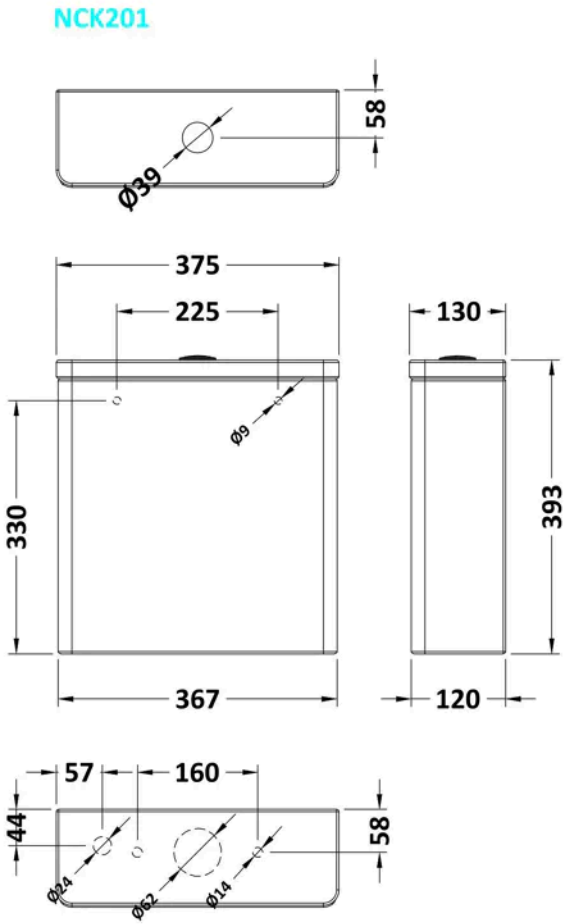

Product Dimensions

Packaged	380 x 205 x 490mm (H x W x D)
Nett Weight	14 kg
Packaged Weight	14 kg

Packaging Details

Box Qty	1

Product Details

Country of Origin	China
Colour/Finish	White
Style	Contemporary
Ce Certified	Yes

© ROXOR Group

Sales Code: ARL-AZAST **Barcode:** 5056474596353 **Brand:** Arley Pro **Description:** Missing Title



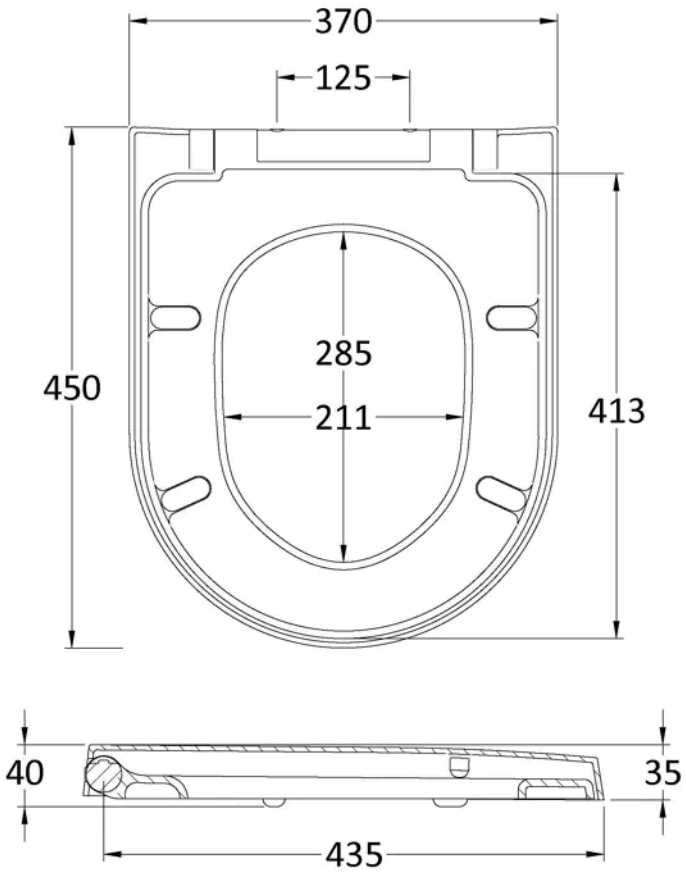

Product Dimensions

Product	40 x 370 x 450mm (H x W x D)
Packaged	377 x 50 x 469mm (H x W x D)
Outer Box	395mm (H)
Nett Weight	2.12 kg
Packaged Weight	2.3 kg

Packaging Details

Box Qty	1
Label Size (mm)	50 x 100

Product Details

Country of Origin	China
Product Material	Stainless Steel Nylon,Urea
Colour/Finish	White
Style	Contemporary
Fixings Included	Yes
Ce Certified	No
Declaration Of Performance	No
Hinge Centres (Max)	175 mm
Hinge Centres (Min)	70 mm
Toilet Seat Function	Soft Close
Toilet Seat Hinge Type	Quick Release
Toilet Seat Type	D Shape

© ROXOR Group