Sales Code: AQUD2H3 **Barcode:** 5056462623405 **Brand:** nuie **Description:** Hudson Reed Pacific 1050mm Chrome D Shape Shower Enclosure - D Shape Handle



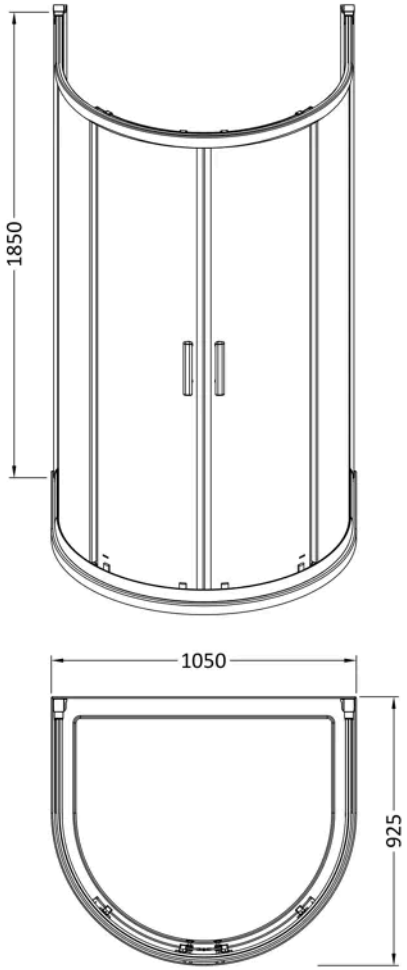

Product Dimensions

Product	1850 x 1050 x 925mm (H x W x D)
Nett Weight	65.96 kg
Packaged Weight	65.96 kg

Product Details

Country of Origin	China
Product Material	Aluminium,Metal
Colour/Finish	Chrome
Style	Contemporary
Handle Type	D Shape
Fixings Included	Yes
Easy Clean	No
Adjustment Max	917
Adjustment Min	897
Ce Certified	Yes
Declaration Of Performance	Yes
Easy Fit	Yes
Enclosure Design	Framed
Entry Width	615 mm
Frame Finish	Chrome
Glass Thickness	6 mm
Handles Included	Yes
No. Doors	2
Ukca Certified	Yes

© ROXOR Group

Sales Code: AQUD2E-E6 **Barcode:** 5055369080182 **Brand:** nuie **Description:** nuie 6mm Glass For D Shaped Enclosure



Technical Drawing Not Available

Product Dimensions

Packaged	1910 x 770 x 170mm (H x W x D)
Nett Weight	61.6 kg
Packaged Weight	61.6 kg

© ROXOR Group

Sales Code: AQUD2R-E6 **Barcode:** 5055369080199 **Brand:** nuie **Description:** nuie D-Shaped Enclosure Rail



Technical Drawing Not Available

Product Dimensions

Packaged	1045 x 105 x 890mm (H x W x D)
Nett Weight	4.1 kg
Packaged Weight	4.1 kg

© ROXOR Group

Sales Code: HAN1203AA **Barcode:** 5056462617886 **Brand:** nuie **Description:** nuie Pacific 145mm Chrome Single Square Handle

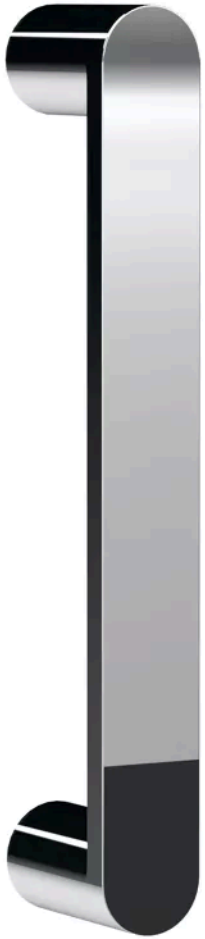

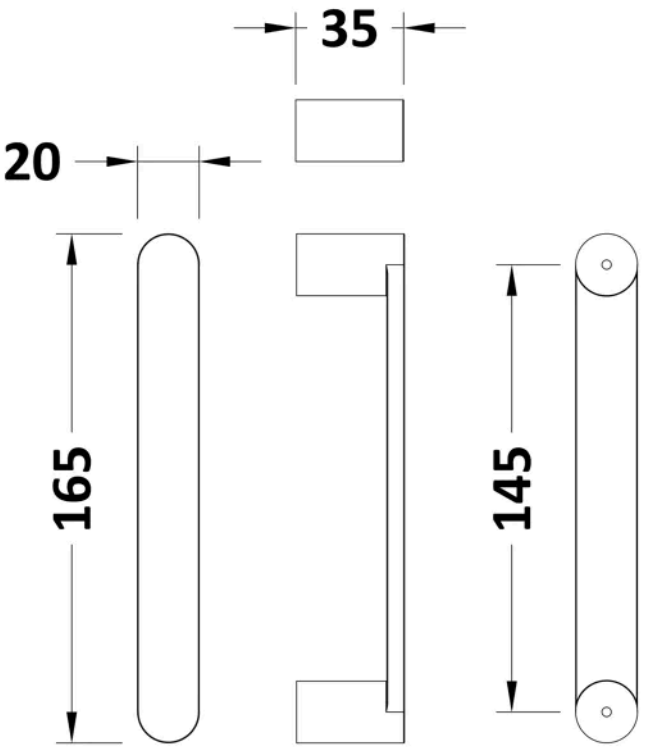

Product Dimensions

Product	165 x 20 x 35mm (H x W x D)
Packaged	74 x 30 x 200mm (H x W x D)
Nett Weight	0.13 kg
Packaged Weight	0.13 kg

Product Details

Country of Origin	China
Product Material	Zinc
Colour/Finish	Chrome
Style	Contemporary

© ROXOR Group