Sales Code: AQU129H3 **Barcode:** 5056462623399 **Brand:** nuie **Description:** Hudson Reed Pacific 1200mm Chrome Offset Quadrant Shower Enclosure



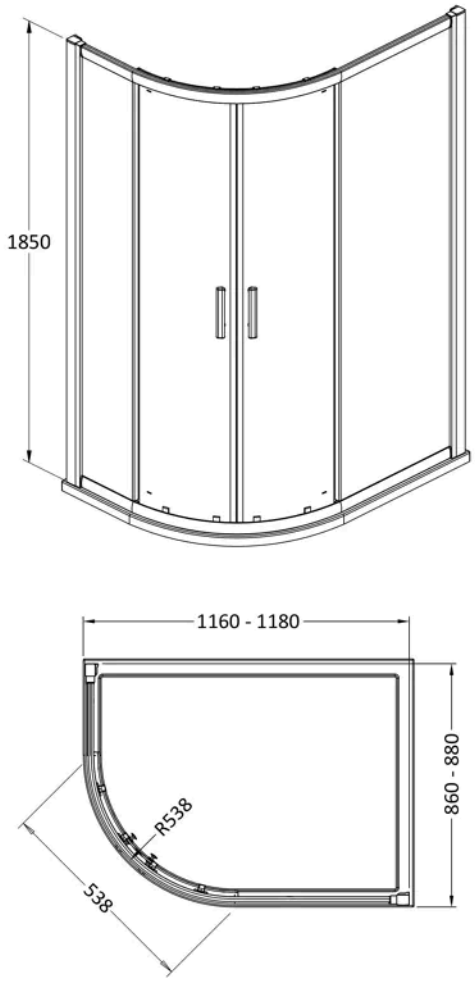

Product Dimensions

Product	1850 x 1180 x 880mm (H x W x D)
Nett Weight	45.26 kg
Packaged Weight	45.26 kg

Product Details

Country of Origin	China
Product Material	Aluminium,Metal
Colour/Finish	Chrome
Style	Contemporary
Handle Type	D Shape
Fixings Included	Yes
Easy Clean	No
Adjustment Max	1160/1180
Adjustment Min	860/880
Ce Certified	Yes
Declaration Of Performance	Yes
Easy Fit	Yes
Enclosure Design	Framed
Entry Width	420 mm
Frame Finish	Chrome
Glass Thickness	6 mm
Handles Included	Yes
No. Doors	2
Radius	538 mm
Ukca Certified	Yes

© ROXOR Group

Sales Code: AQU129

Barcode: 5055369080137

Brand: nuie

Description: Hudson Reed Pacific 900mm Chrome Offset Quadrant Shower Enclosure - Square T Shape Handle



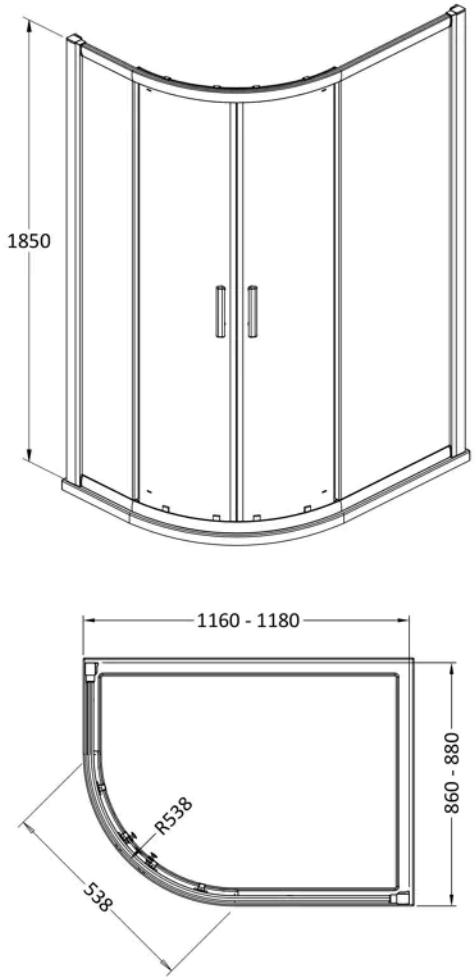

Product Dimensions

Product	1850 x 1180 x 880mm (H x W x D)
Packaged	1910 x 675 x 155mm (H x W x D)
Nett Weight	45 kg
Packaged Weight	45 kg

Packaging Details

Label Size (mm)	50 x 100

Product Details

Country of Origin	China
Product Material	Aluminium,Metal
Colour/Finish	Chrome
Style	Contemporary
Handle Type	Square T Shape
Fixings Included	Yes
Easy Clean	No
Adjustment Max	1160/1180
Adjustment Min	860/880
Ce Certified	Yes
Declaration Of Performance	Yes
Easy Fit	Yes
Enclosure Design	Framed
Entry Width	420 mm
Frame Finish	Chrome
Glass Thickness	6 mm
Handles Included	Yes
No. Doors	2
Radius	538 mm
Support Bar Included	No
Ukca Certified	Yes
Wheel Type	Dual Quick Release

© ROXOR Group

Sales Code: HAN1203AA **Barcode:** 5056462617886 **Brand:** nuie **Description:** nuie Pacific 145mm Chrome Single Square Handle

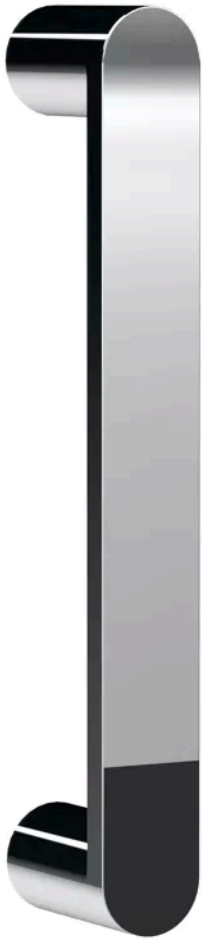

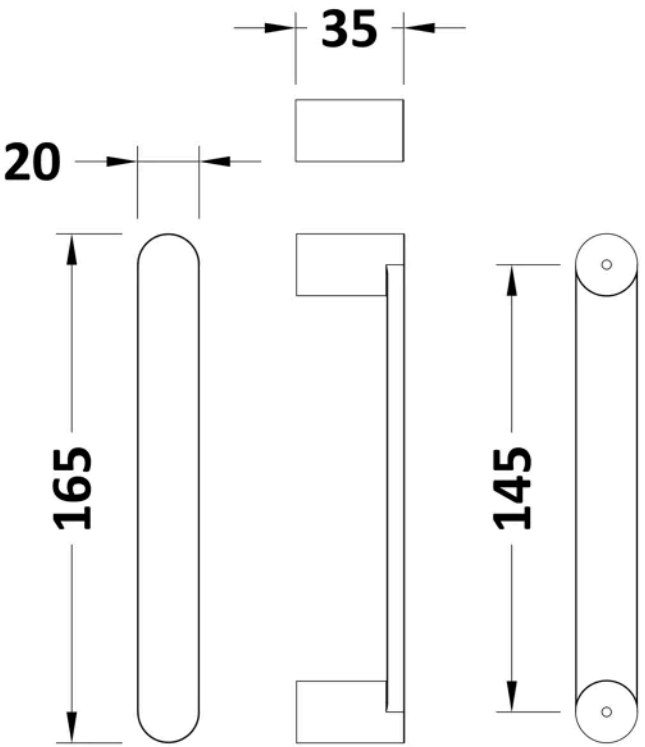

Product Dimensions

Product	165 x 20 x 35mm (H x W x D)
Packaged	74 x 30 x 200mm (H x W x D)
Nett Weight	0.13 kg
Packaged Weight	0.13 kg

Product Details

Country of Origin	China
Product Material	Zinc
Colour/Finish	Chrome
Style	Contemporary

© ROXOR Group