Sales Code: AQU10H3 **Barcode:** 5056462623344 **Brand:** nuie **Description:** Hudson Reed Pacific 1000mm Chrome Quadrant Shower Enclosure - D Shape Handle



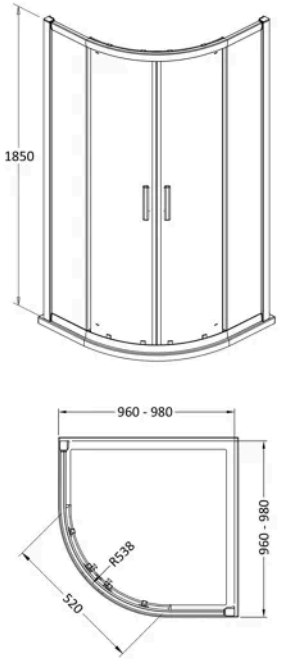

Product Dimensions

Product	1850 x 980 x 980mm (H x W x D)
Nett Weight	49.76 kg
Packaged Weight	49.76 kg

Product Details

Country of Origin	China
Product Material	Aluminium,Metal
Colour/Finish	Chrome
Style	Contemporary
Handle Type	D Shape
Fixings Included	Yes
Easy Clean	No
Adjustment Max	980
Adjustment Min	960
Ce Certified	Yes
Declaration Of Performance	Yes
Easy Fit	Yes
Enclosure Design	Framed
Entry Width	520 mm
Frame Finish	Chrome
Glass Thickness	6 mm
Handles Included	Yes
No. Doors	2
Ukca Certified	Yes

© ROXOR Group

Sales Code: AQU10 **Barcode:** 5055369080076 **Brand:** nuie **Description:** Hudson Reed Pacific 1000mm Chrome Quadrant Shower Enclosure - Square T Shape Handle



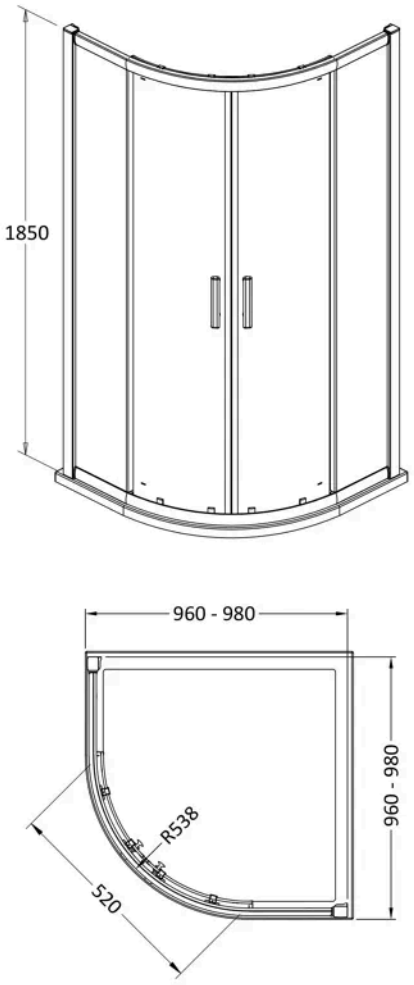

Product Dimensions

Product	1850 x 980 x 980mm (H x W x D)
Packaged	1910 x 540 x 155mm (H x W x D)
Nett Weight	49.5 kg
Packaged Weight	49.5 kg

Packaging Details

Label Size (mm)	50 x 100

Product Details

Country of Origin	China
Product Material	Aluminium,Metal
Colour/Finish	Chrome
Style	Contemporary
Handle Type	Square T Shape
Fixings Included	Yes
Easy Clean	No
Adjustment Max	980
Adjustment Min	960
Ce Certified	Yes
Declaration Of Performance	Yes
Easy Fit	Yes
Enclosure Design	Framed
Entry Width	520 mm
Frame Finish	Chrome
Glass Thickness	6 mm
Handles Included	Yes
No. Doors	2
Radius	538 mm
Support Bar Included	No
Ukca Certified	Yes
Wheel Type	Dual Quick Release

© ROXOR Group

Sales Code: HAN1203AA **Barcode:** 5056462617886 **Brand:** nuie **Description:** nuie Pacific 145mm Chrome Single Square Handle

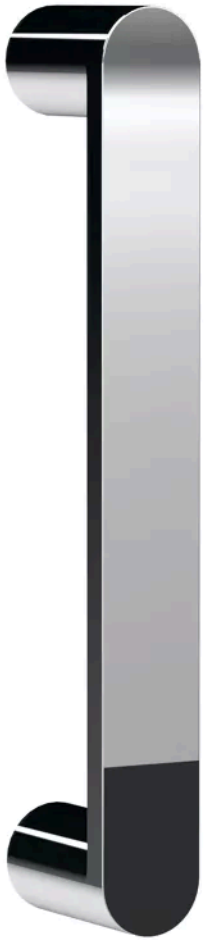

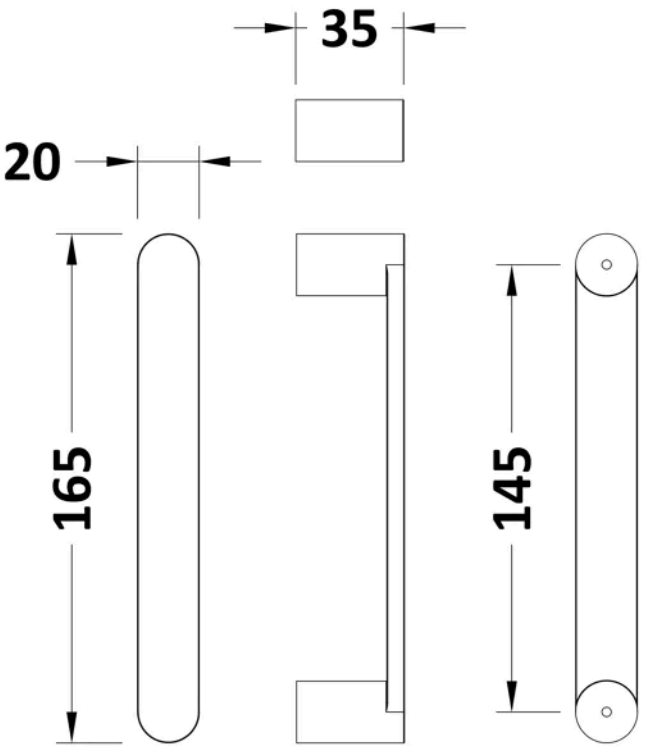

Product Dimensions

Product	165 x 20 x 35mm (H x W x D)
Packaged	74 x 30 x 200mm (H x W x D)
Nett Weight	0.13 kg
Packaged Weight	0.13 kg

Product Details

Country of Origin	China
Product Material	Zinc
Colour/Finish	Chrome
Style	Contemporary

© ROXOR Group