**Sales Code:** AQSE1H3 **Barcode:** 5056462623412 **Brand:** nuie **Description:** Hudson Reed Pacific 900mm Chrome Quadrant Single Entry Shower Enclosure



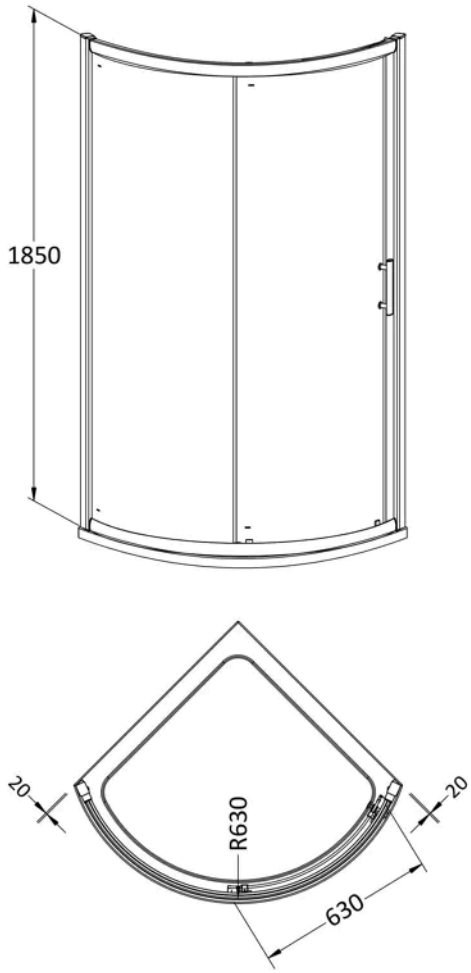


## Product Dimensions

| | |
|---|---|
| Product | 1850 x 910 x 910mm (H x W x D) |
| Nett Weight | 46.53 kg |
| Packaged Weight | 46.53 kg |

## Product Details

| | |
|---|---|
| Country of Origin | China |
| Product Material | Aluminium,Metal |
| Colour/Finish | Chrome |
| Style | Contemporary |
| Handle Type | D Shape |
| Fixings Included | Yes |
| Easy Clean | No |
| Ce Certified | Yes |
| Declaration Of Performance | Yes |
| Easy Fit | Yes |
| Enclosure Design | Framed |
| Entry Width | 560 mm |
| Frame Finish | Chrome |
| Glass Thickness | 6 mm |
| Handles Included | Yes |
| No. Doors | 1 |
| Radius | 630 mm |
| Ukca Certified | Yes |

© ROXOR Group

**Sales Code:** AQSE1 **Barcode:** 5055369080175 **Brand:** nuie **Description:** Hudson Reed Pacific 860mm Chrome Quadrant Shower Enclosure



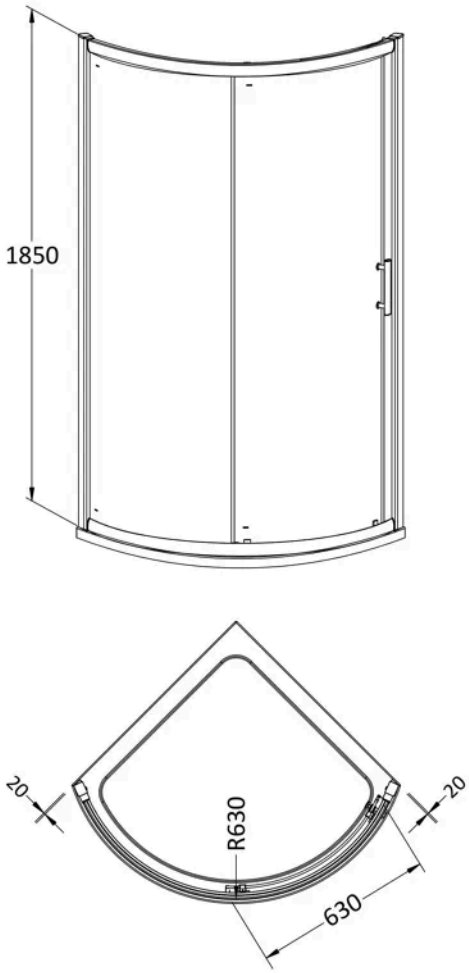


## Product Dimensions

| | |
|---|---|
| Product | 1850 x 910 x 910mm (H x W x D) |
| Packaged | 1910 x 760 x 180mm (H x W x D) |
| Nett Weight | 46.4 kg |
| Packaged Weight | 46.4 kg |

## Packaging Details

| | |
|---|---|
| Label Size (mm) | 50 x 100 |

## Product Details

| | |
|---|---|
| Country of Origin | China |
| Product Material | Aluminium,Metal |
| Colour/Finish | Chrome |
| Style | Contemporary |
| Handle Type | Square T Shape |
| Fixings Included | Yes |
| Easy Clean | No |
| Ce Certified | Yes |
| Declaration Of Performance | Yes |
| Easy Fit | Yes |
| Enclosure Design | Framed |
| Entry Width | 560 mm |
| Frame Finish | Chrome |
| Glass Thickness | 6 mm |
| Handles Included | Yes |
| No. Doors | 1 |
| Radius | 630 mm |
| Support Bar Included | No |
| Ukca Certified | Yes |
| Wheel Type | Dual Quick Release |

© ROXOR Group

**Sales Code:** HAN1203AA **Barcode:** 5056462617886 **Brand:** nuie **Description:** nuie Pacific 145mm Chrome Single Square Handle

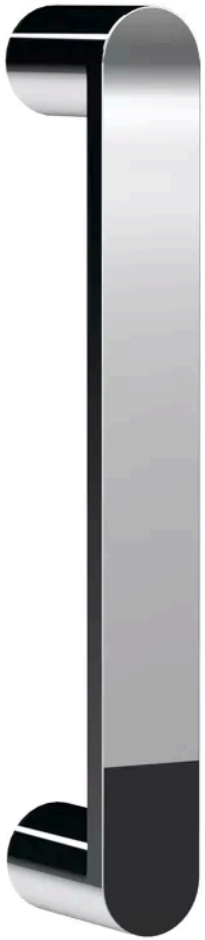

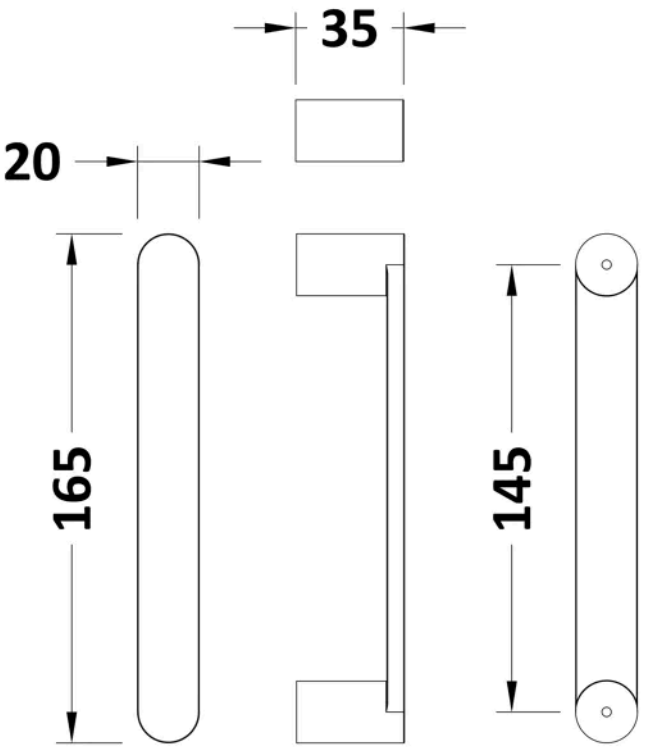


## Product Dimensions

| | |
|---|---|
| Product | 165 x 20 x 35mm (H x W x D) |
| Packaged | 74 x 30 x 200mm (H x W x D) |
| Nett Weight | 0.13 kg |
| Packaged Weight | 0.13 kg |

## Product Details

| | |
|---|---|
| Country of Origin | China |
| Product Material | Zinc |
| Colour/Finish | Chrome |
| Style | Contemporary |

© ROXOR Group