Sales Code: ALSQ4 **Barcode:** 5056474594298 **Brand:** Arley Pro **Description:** Arley Pro Chrome Sequential Thermostatic Shower Valve



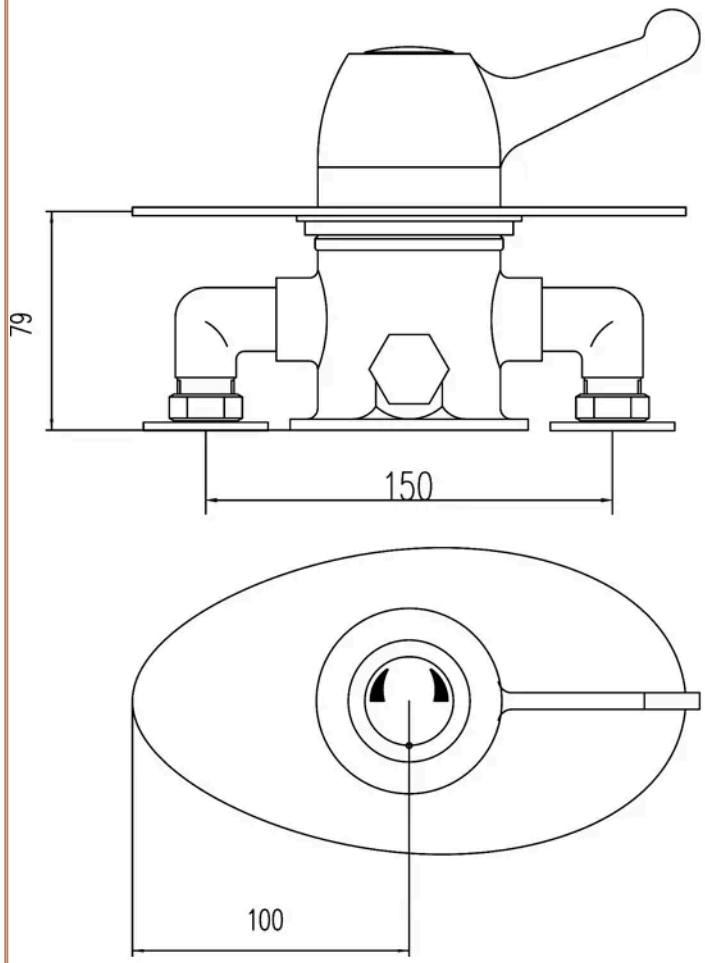

Product Dimensions

Product	110 x 205 x 152mm (H x W x D)
Packaged	170 x 210 x 240mm (H x W x D)
Outer Box	455 x 510 x 380mm (H x W x D)
Nett Weight	3.23 kg
Packaged Weight	3.23 kg

Packaging Details

Box Qty	1
Label Size (mm)	50 x 100
Label Colour	White
Label Qty	1.0000

Product Details

Country of Origin	United Kingdom
Product Material	Brass
Control Type	Manual
WRAS Approved	No
Valve/Cartridge Type	Sequential Valve
Colour/Finish	Chrome
Mount Type	Wall Hung
Style	Contemporary
Handle Type	Round
TMV2 Approved	No
TMV3 Approved	No
Pipe Centres	150
Handset Included	No
Head Included	No
Min Operating Pressure	0.2 Bar
No. Outlets	1.0000
Valve / Cartridge Type	Sequential Valve

© ROXOR Group