Sales Code: ALMPB07 **Barcode:** 5056474594571 **Brand:** Arley Pro **Description:** Arley Pro Square Brushed Pewter Dual Flush Push Button



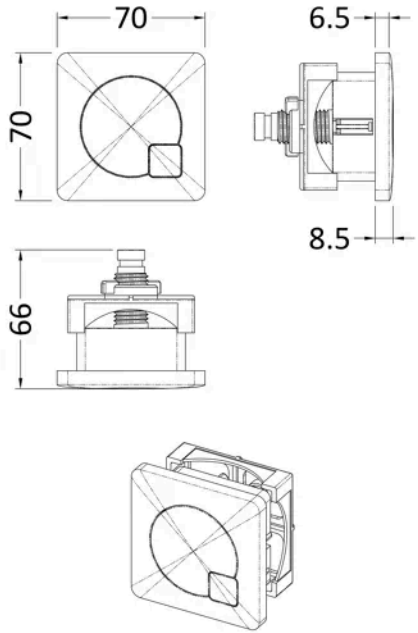

Product Dimensions

Product	70 x 70 x 99mm (H x W x D)
Packaged	80 x 155 x 50mm (H x W x D)
Nett Weight	0.2 kg
Packaged Weight	0.2 kg

Packaging Details

Box Qty	1
Label Size (mm)	50 x 100
Label Colour	White
Label Qty	1.0000

Product Details

Country of Origin	China
Product Material	Abs
Colour/Finish	Brushed Pewter
Style	Contemporary
Fixings Included	Yes

© ROXOR Group