Sales Code: ALH190MB **Barcode:** 5056474592126 **Brand:** Arley Pro **Description:** Arley Pro 210mm Matt Black D Handle



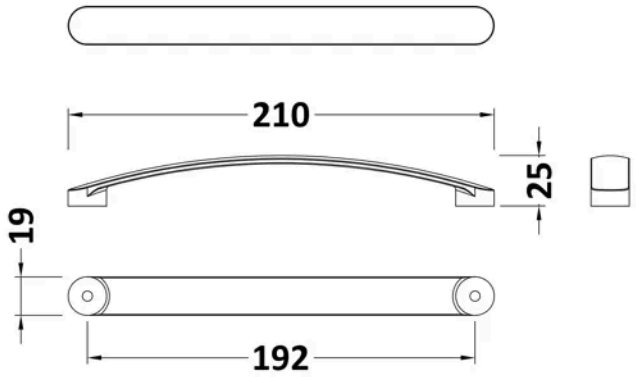

Product Dimensions

Product	210 x 19 x 24mm (H x W x D)
Packaged	24 x 15 x 206mm (H x W x D)
Nett Weight	0.25 kg
Packaged Weight	0.25 kg

Packaging Details

Box Qty	1
Label Size (mm)	50 x 100
Label Colour	White
Label Qty	1.0000

Product Details

Country of Origin	China
Product Material	Brass
Colour/Finish	Matt Black
Style	Contemporary
Handle Type	D Shape
Fixings Included	Yes

© ROXOR Group