Sales Code: ALH184N **Barcode:** 5056474592119 **Brand:** Arley Pro **Description:** Arley Pro 192mm Satin Nickel D Handle



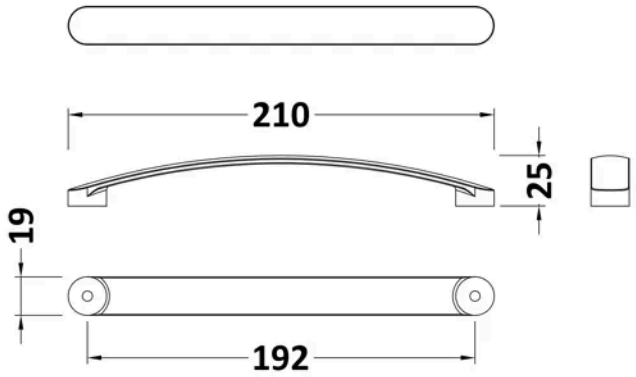

Product Dimensions

Product	211 x 19 x 24mm (H x W x D)
Packaged	24 x 15 x 206mm (H x W x D)
Nett Weight	0.25 kg
Packaged Weight	0.25 kg

Packaging Details

Box Qty	1
Label Size (mm)	50 x 100
Label Colour	White
Label Qty	1.0000

Product Details

Country of Origin	China
Product Material	Brass
Colour/Finish	Satin Nickel
Style	Contemporary
Handle Type	D Shape
Fixings Included	Yes

© ROXOR Group