Sales Code: ALFRSBFSCH **Barcode:** 5056883730430 **Brand:** Arley Pro **Description:** Arley Pro 5in1 Square Wall Hung Pan Frame Pack With Chrome Push Button



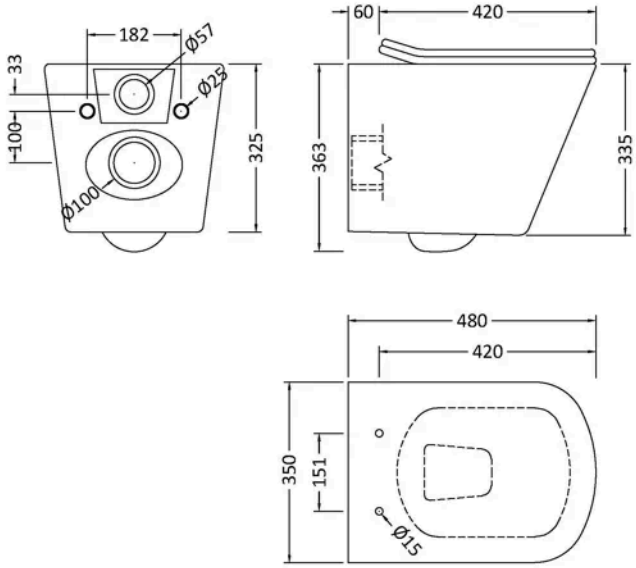

Product Dimensions

Product	363 x 350 x 480mm (H x W x D)
Packaged	1125 x 560 x 160mm (H x W x D)
Nett Weight	43.67 kg
Packaged Weight	43.67 kg

Product Details

Country of Origin	China
Product Material	Stainless Steel,Vitreous China
Colour/Finish	White/Chrome
Style	Contemporary
Ce Certified	Yes
Flush Operating Type	Push Button
Includes Seat	Yes
Pan Type	Wall Hung

© ROXOR Group

Sales Code: ALTY09 **Barcode:** 5056474596575 **Brand:** Arley Pro **Description:** Arley Pro Dual Flush Concealed Cistern With Frame



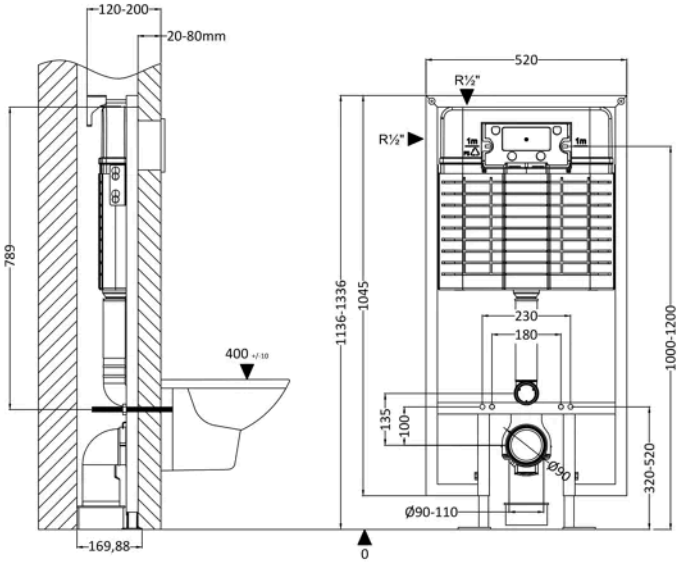

Product Dimensions

Product	1136 x 520 x 204mm (H x W x D)
Packaged	1125 x 560 x 160mm (H x W x D)
Nett Weight	11.17 kg
Packaged Weight	11.17 kg

Packaging Details

Box Qty	1

Product Details

Country of Origin	China
Product Material	Stainless Steel
Colour/Finish	Chrome
Style	Contemporary

© ROXOR Group

Sales Code: ALTY09PS **Barcode:** 5056474594359 **Brand:** Arley Pro **Description:** Arley Pro Square Chrome Dual Flush Push Button

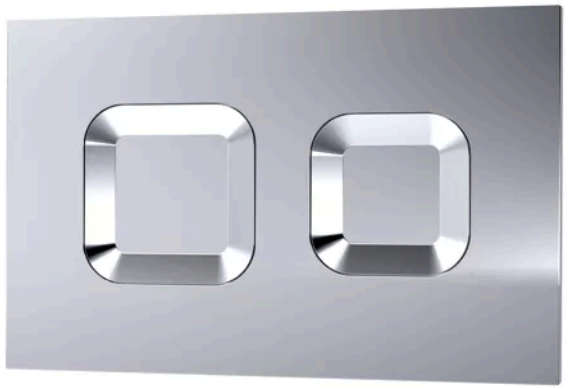

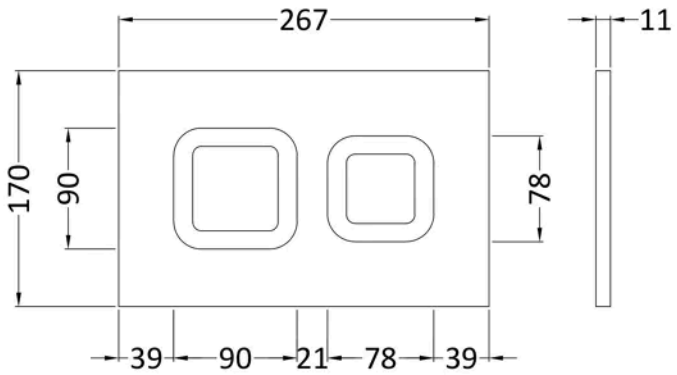

Product Dimensions

Product	170 x 267 x 11mm (H x W x D)
Packaged	50 x 220 x 290mm (H x W x D)
Nett Weight	0.5 kg
Packaged Weight	0.5 kg

Packaging Details

Box Qty	1

Product Details

Country of Origin	United Kingdom
Product Material	Abs
Colour/Finish	Chrome
Style	Contemporary

© ROXOR Group

Sales Code: ARLCG440 **Barcode:** 5056883730379 **Brand:** Arley Pro **Description:** Square W/H Rimless Pan & S/C Seat



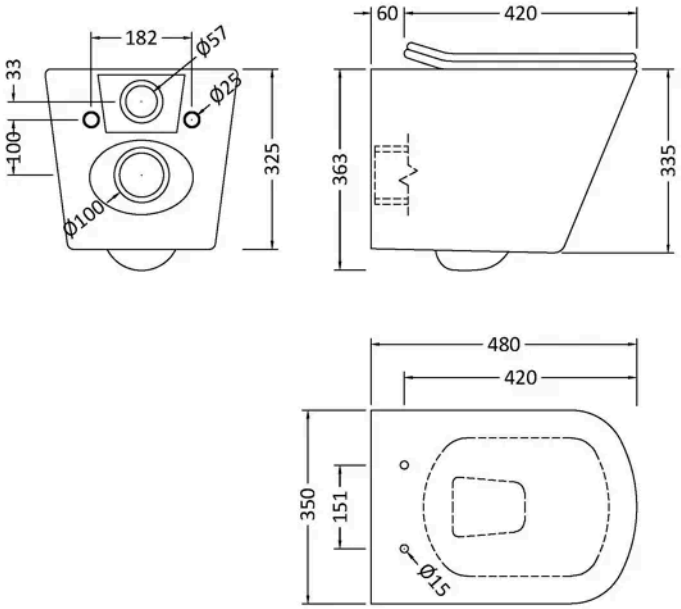

Product Dimensions

Product	363 x 350 x 480mm (H x W x D)
Packaged	430 x 435 x 540mm (H x W x D)
Nett Weight	28 kg
Packaged Weight	32 kg

Packaging Details

Box Qty	1

Product Details

Country of Origin	China
Product Material	Vitreous China
Colour/Finish	White
Style	Contemporary
Ce Certified	Yes
Includes Seat	Yes
Pan Type	Wall Hung

© ROXOR Group