**Sales Code:** ALFRRBFRCH **Barcode:** 5056883730386 **Brand:** Arley Pro **Description:** Arley Pro 5in1 Round Wall Hung Pan Frame Pack With Chrome Push Button



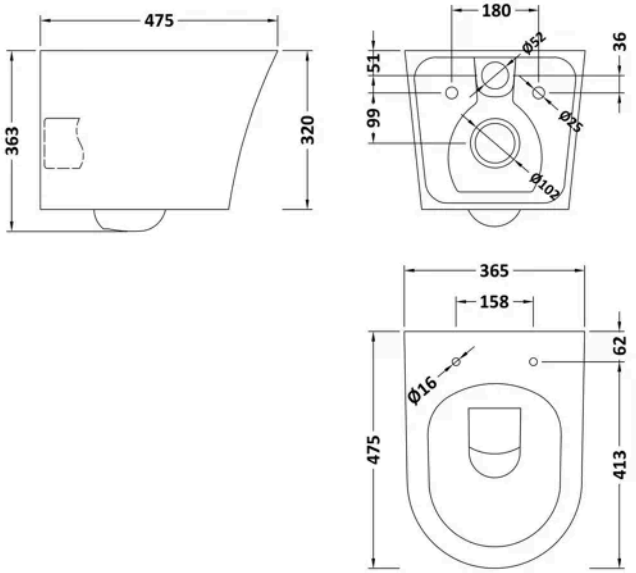


## Product Dimensions

| | |
|---|---|
| Product | 363 x 365 x 475mm (H x W x D) |
| Packaged | 1125 x 560 x 160mm (H x W x D) |
| Nett Weight | 36.18 kg |
| Packaged Weight | 36.18 kg |

## Product Details

| | |
|---|---|
| Country of Origin | China |
| Product Material | Stainless Steel,Vitreous China |
| Colour/Finish | White/Chrome |
| Style | Contemporary |
| Ce Certified | Yes |
| Flush Operating Type | Push Button |
| Includes Seat | Yes |
| Pan Type | Wall Hung |

© ROXOR Group

**Sales Code:** ALTY009PR **Barcode:** 5056474594397 **Brand:** Arley Pro **Description:** Arley Pro Round Chrome Dual Flush Push Button



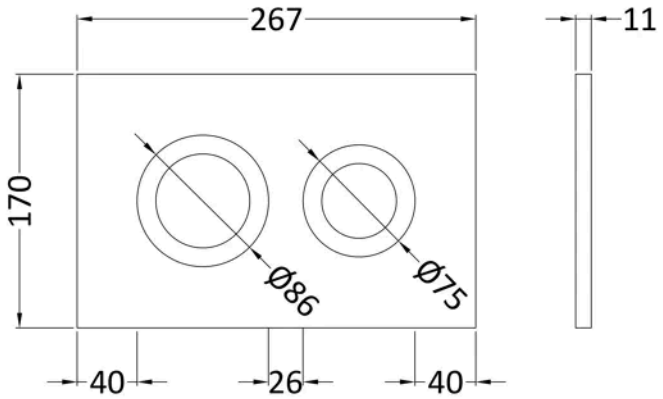


## Product Dimensions

| | |
|---|---|
| Product | 170 x 267 x 11mm (H x W x D) |
| Packaged | 175 x 300 x 11mm (H x W x D) |
| Nett Weight | 0.01 kg |
| Packaged Weight | 0.01 kg |

## Packaging Details

| | |
|---|---|
| Box Qty | 1 |

## Product Details

| | |
|---|---|
| Country of Origin | United Kingdom |
| Product Material | Abs |
| Colour/Finish | Chrome |
| Style | Contemporary |

© ROXOR Group

**Sales Code:** ALTY09 **Barcode:** 5056474596575 **Brand:** Arley Pro **Description:** Arley Pro Dual Flush Concealed Cistern With Frame



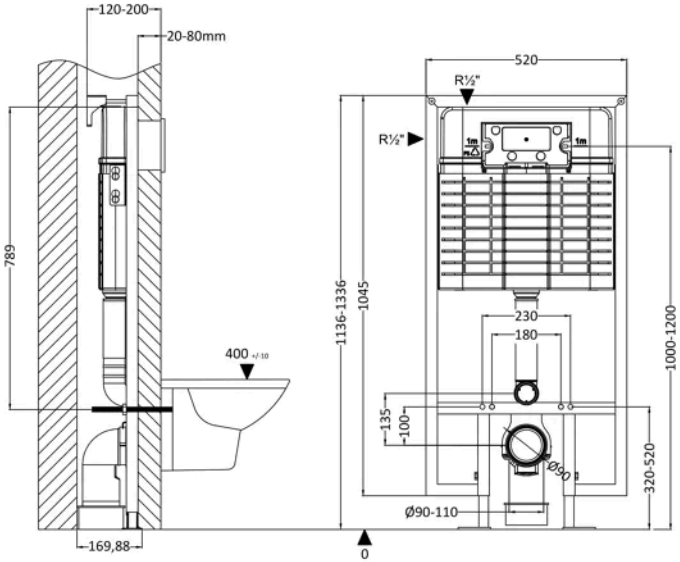


## Product Dimensions

| | |
|---|---|
| Product | 1136 x 520 x 204mm (H x W x D) |
| Packaged | 1125 x 560 x 160mm (H x W x D) |
| Nett Weight | 11.17 kg |
| Packaged Weight | 11.17 kg |

## Packaging Details

| | |
|---|---|
| Box Qty | 1 |

## Product Details

| | |
|---|---|
| Country of Origin | China |
| Product Material | Stainless Steel |
| Colour/Finish | Chrome |
| Style | Contemporary |

© ROXOR Group

**Sales Code:** ARLCG341 **Barcode:** 5056883730362 **Brand:** Arley Pro **Description:** Round W/H Rimless Pan & S/C Seat



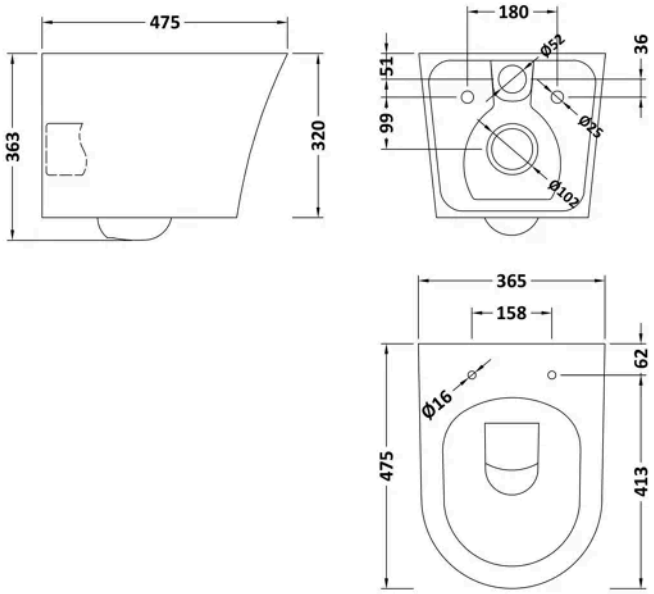


## Product Dimensions

| | |
|---|---|
| Product | 363 x 365 x 475mm (H x W x D) |
| Packaged | 420 x 395 x 540mm (H x W x D) |
| Nett Weight | 24 kg |
| Packaged Weight | 25 kg |

## Packaging Details

| | |
|---|---|
| Box Qty | 1 |

## Product Details

| | |
|---|---|
| Country of Origin | China |
| Product Material | Vitreous China |
| Colour/Finish | White |
| Style | Contemporary |
| Ce Certified | Yes |
| Includes Seat | Yes |
| Pan Type | Wall Hung |

© ROXOR Group