**Sales Code:** ALER08 **Barcode:** 5056474594670 **Brand:** Arley Pro **Description:** Arley Pro Chrome Flip Basin Waste



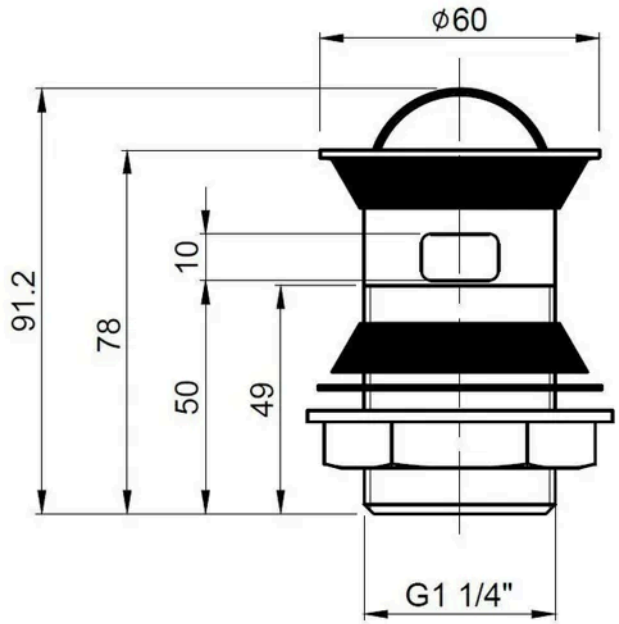


## Product Dimensions

| | |
|---|---|
| Product | 62 x 62 x 83mm (H x W x D) |
| Packaged | 65 x 65 x 100mm (H x W x D) |
| Nett Weight | 0.21 kg |
| Packaged Weight | 0.21 kg |

## Packaging Details

| | |
|---|---|
| Box Qty | 1 |

## Product Details

| | |
|---|---|
| Country of Origin | China |
| Product Material | Stainless Steel |
| Waste Type | Flip |
| Colour/Finish | Chrome |
| Style | Contemporary |
| Waste Shape | Round |

© ROXOR Group