Sales Code: ALER02 **Barcode:** 5056474594816 **Brand:** Arley Pro **Description:** Arley Pro Chrome Flip Basin Waste



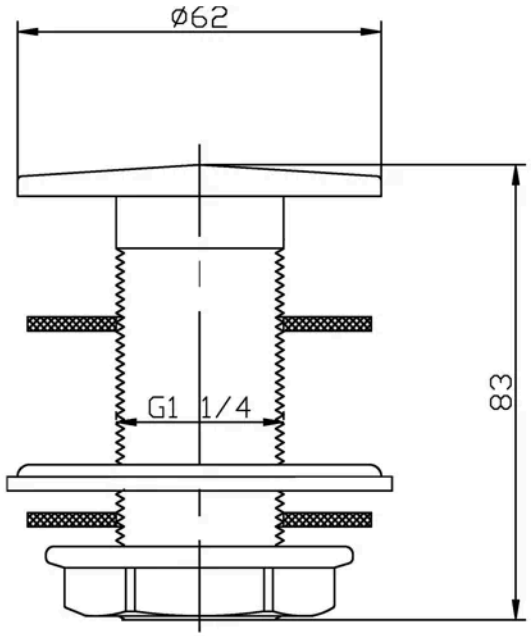

Product Dimensions

Product	83 x 62 x 62mm (H x W x D)
Packaged	65 x 65 x 100mm (H x W x D)
Nett Weight	0.32 kg
Packaged Weight	0.32 kg

Packaging Details

Box Qty	1

Product Details

Country of Origin	China
Product Material	Brass
Waste Type	Flip
Colour/Finish	Chrome
Style	Contemporary
Waste Shape	Round

© ROXOR Group