Sales Code: ALEK710 **Barcode:** 5056474594731 **Brand:** Arley Pro **Description:** Arley Pro Brushed Pewter Universal Push Button Basin Waste



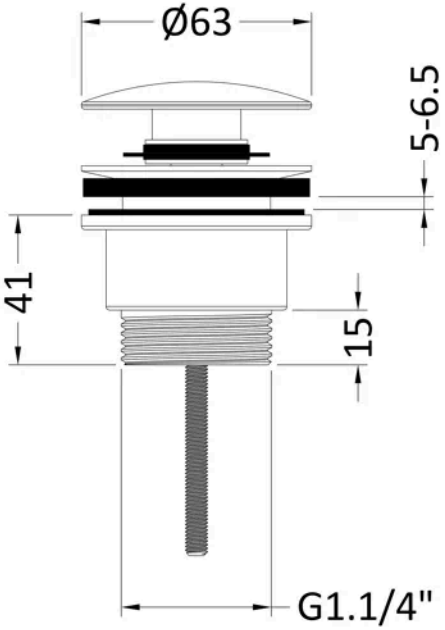

Product Dimensions

Product	110 x 63 x 65mm (H x W x D)
Packaged	100 x 65 x 65mm (H x W x D)
Nett Weight	0.34 kg
Packaged Weight	0.34 kg

Packaging Details

Box Qty	1

Product Details

Country of Origin	China
Product Material	Brass
Waste Type	Push Button
Colour/Finish	Brushed Pewter
Style	Contemporary
Waste Shape	Round

© ROXOR Group