Sales Code: ALEK321 **Barcode:** 5056474594946 **Brand:** Arley Pro **Description:** Arley Pro Chrome Push Button Bath Waste and Overflow



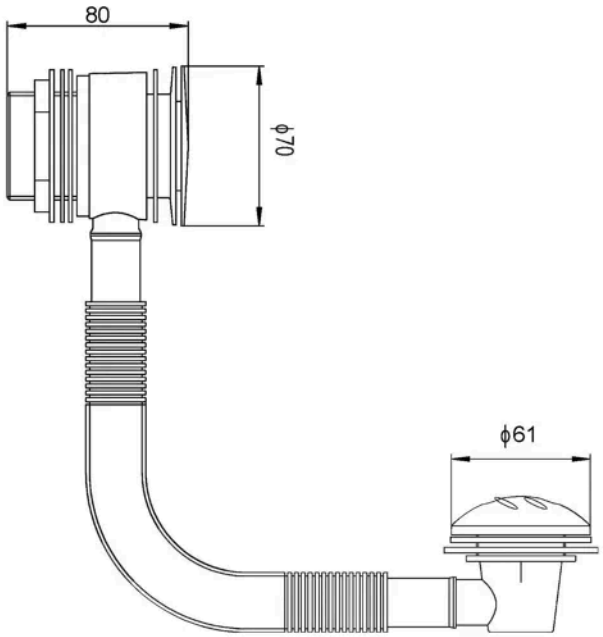

Product Dimensions

Product	80 x 70 x 70mm (H x W x D)
Packaged	80 x 140 x 210mm (H x W x D)
Nett Weight	0.5 kg
Packaged Weight	0.6 kg

Packaging Details

Box Qty	1

Product Details

Country of Origin	China
Product Material	Brass Abs
Waste Type	Push Button
Colour/Finish	Chrome
Style	Contemporary
Waste Shape	Round

© ROXOR Group