Sales Code: ALEK304 **Barcode:** 5056474594779 **Brand:** Arley Pro **Description:** Arley Pro Chrome Unslotted Push Button Basin Waste



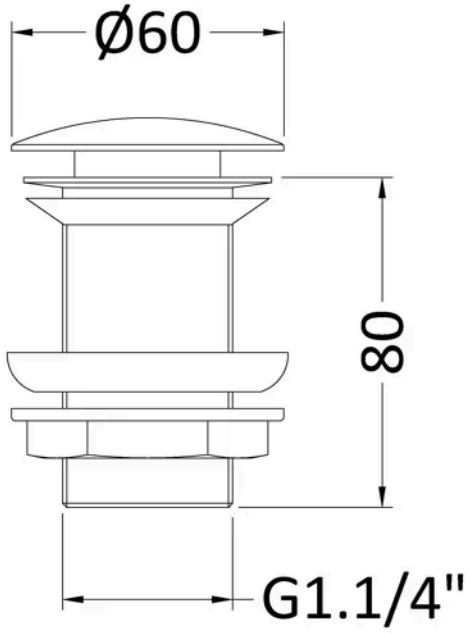

Product Dimensions

Product	61 x 61 x 97mm (H x W x D)
Packaged	105 x 65 x 65mm (H x W x D)
Nett Weight	0.22 kg
Packaged Weight	0.28 kg

Packaging Details

Box Qty	1

Product Details

Country of Origin	China
Product Material	Brass
Waste Type	Push Button
Colour/Finish	Chrome
Style	Contemporary
Waste Shape	Round

© ROXOR Group