Sales Code: ALEK1510 **Barcode:** 5056474594748 **Brand:** Arley Pro **Description:** Arley Pro Brushed Bronze Universal Push Button Basin Waste



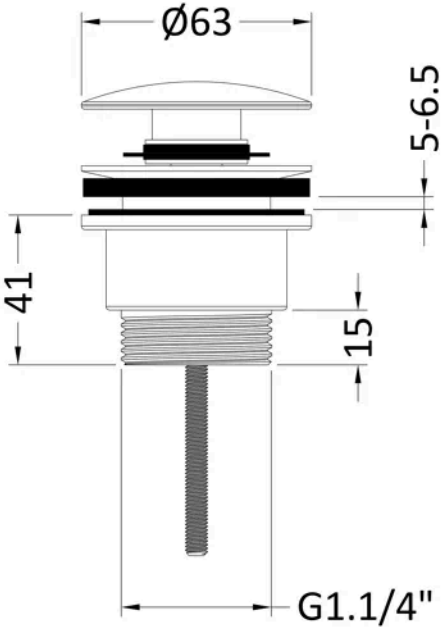

Product Dimensions

Product	110 x 63 x 63mm (H x W x D)
Packaged	100 x 65 x 65mm (H x W x D)
Outer Box	225 x 330mm (H x W)
Nett Weight	0.34 kg
Packaged Weight	0.34 kg

Packaging Details

Box Qty	1
Label Size (mm)	50 x 100
Label Colour	White
Label Qty	2.0000

Product Details

Country of Origin	China
Product Material	Brass
Waste Type	Push Button
Colour/Finish	Brushed Bronze
Style	Contemporary
Waste Shape	Round

© ROXOR Group