Sales Code: ALE396 **Barcode:** 5056474594922 **Brand:** Arley Pro **Description:** Arley Pro Chrome Plug With Chain Bath Waste



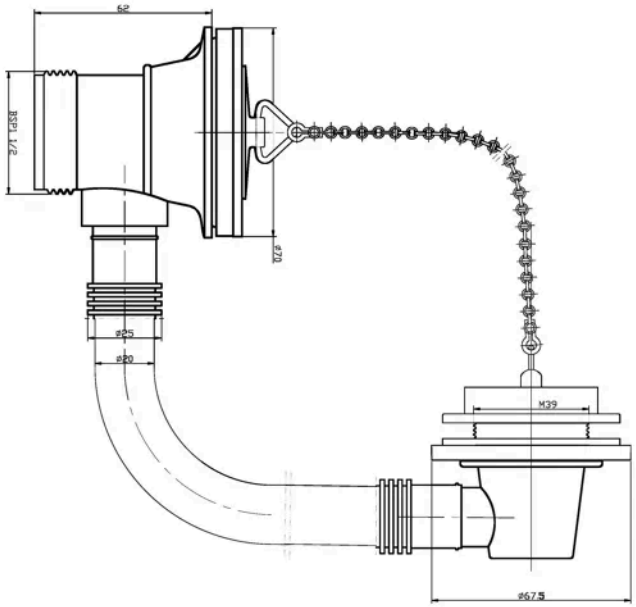

Product Dimensions

Product	62 x 70 x 70mm (H x W x D)
Packaged	260 x 50 x 170mm (H x W x D)
Nett Weight	0.19 kg
Packaged Weight	0.4 kg

Packaging Details

Box Qty	1

Product Details

Country of Origin	China
Product Material	Brass Abs
Waste Type	Plug / Chain
Colour/Finish	Chrome
Style	Contemporary
Waste Shape	Round

© ROXOR Group