Sales Code: ALE353 **Barcode:** 5056474594663 **Brand:** Arley Pro **Description:** Arley Pro Arley Chrome Pro Plug With Chain Basin Waste



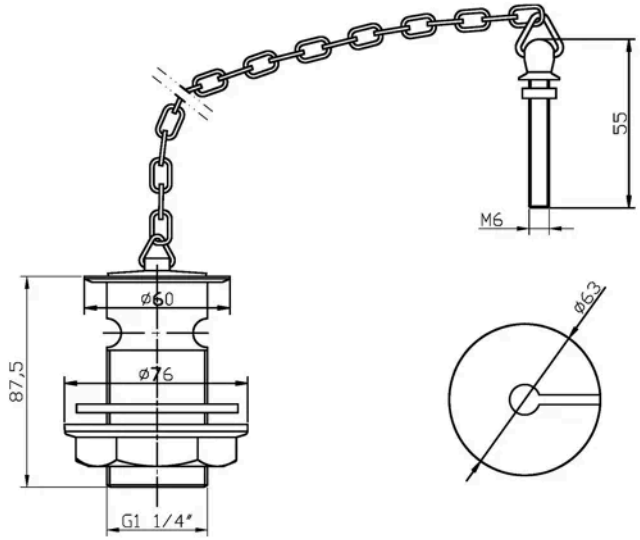

Product Dimensions

Product	88 x 60 x 60mm (H x W x D)
Packaged	100 x 70 x 70mm (H x W x D)
Nett Weight	0.28 kg
Packaged Weight	0.28 kg

Packaging Details

Box Qty	1

Product Details

Country of Origin	China
Product Material	Brass
Waste Type	Plug / Chain
Colour/Finish	Chrome
Style	Contemporary
Waste Shape	Round

© ROXOR Group