Sales Code: ALE343 **Barcode:** 5056474594854 **Brand:** Arley Pro **Description:** Arley Pro Chrome Plug With Chain Basin Waste



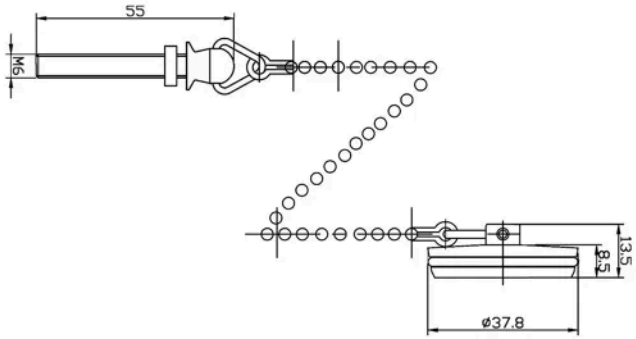

Product Dimensions

Product	38 x 38 x 14mm (H x W x D)
Packaged	10 x 70 x 90mm (H x W x D)
Nett Weight	0.04 kg
Packaged Weight	0.04 kg

Packaging Details

Box Qty	1

Product Details

Country of Origin	China
Product Material	Brass
Waste Type	Plug / Chain
Colour/Finish	Chrome
Style	Contemporary
Waste Shape	Round

© ROXOR Group