Sales Code: ALC10318

Barcode: 5056474595165

Brand: Arley Pro

Description: Arley Pro 455mm x 362mm x 396mm Fireclay White Single Bowl Traditional Cleaner Sink With Grid



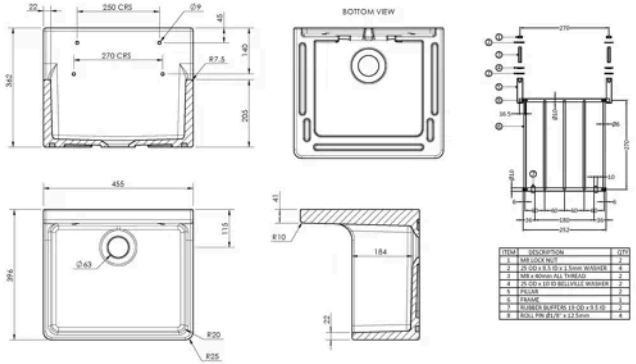

Product Dimensions

Product	362 x 455 x 396mm (H x W x D)
Packaged	405 x 465 x 383mm (H x W x D)
Nett Weight	25.5 kg
Packaged Weight	26 kg

Packaging Details

Box Qty	1

Product Details

Country of Origin	United Arab Emirates
Product Material	Fireclay
Colour/Finish	White
Style	Traditional
Inner Bowl Depth	285 mm
Inner Bowl Height	184 mm
Inner Bowl Width	375 mm
No. Of Tapholes	No Tapholes
Number Of Bowls	1
Overflow Included	No
Sink Thickness	22 mm
Tap Included	No
Waste Included	No
Waste Size Required	2.0" (86mm flange)

© ROXOR Group