Sales Code: ALBL301 **Barcode:** 5056474595189 **Brand:** Arley Pro **Description:** Arley Pro Brushed Steel Cleaner Sink Leg Set and Wall Bracket (Pair)



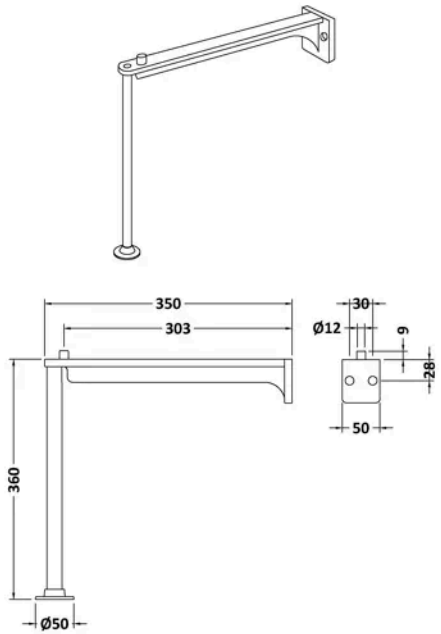

Product Dimensions

Product	350 x 50 x 355mm (H x W x D)
Packaged	90 x 295 x 600mm (H x W x D)
Nett Weight	3.58 kg
Packaged Weight	3.95 kg

Packaging Details

Box Qty	1
Label Size (mm)	50 x 100
Label Colour	White
Label Qty	2.0000

Product Details

Country of Origin	China
Product Material	Stainless Steel
Colour/Finish	Brushed Steel
Style	Traditional
Fixings Included	Yes

© ROXOR Group