Sales Code: AL3200 **Barcode:** 5056474594328 **Brand:** Arley Pro **Description:** Arley Pro Chrome Concealed Or Exposed Shower Valve



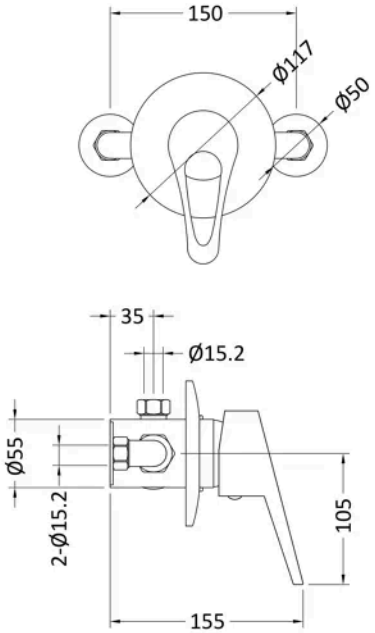

Product Dimensions

Product	117 x 150 x 155mm (H x W x D)
Packaged	135 x 120 x 205mm (H x W x D)
Outer Box	285 x 215 x 500mm (H x W x D)
Nett Weight	1.72 kg
Packaged Weight	1.72 kg

Packaging Details

Box Qty	1
Label Size (mm)	50 x 100
Label Colour	White
Label Qty	2.0000

Product Details

Country of Origin	China
Product Material	Brass
Control Type	Manual
WRAS Approved	No
Valve/Cartridge Type	Single Lever Cartridge
Colour/Finish	Chrome
Mount Type	Surface/Wall
Style	Contemporary
Handle Type	Lever
TMV2 Approved	No
TMV3 Approved	No
Pipe Centres	150
Handset Included	No
Head Included	No
Min Operating Pressure	0.2 Bar
No. Outlets	1.0000
Outlet Elbow Supplied	No
Valve / Cartridge Type	Single Lever Cartridge

© ROXOR Group