Sales Code: AG302 **Barcode:** 5055146126652 **Brand:** nuie **Description:** nuie Chrome Traditional Twin Exposed Shower Valve



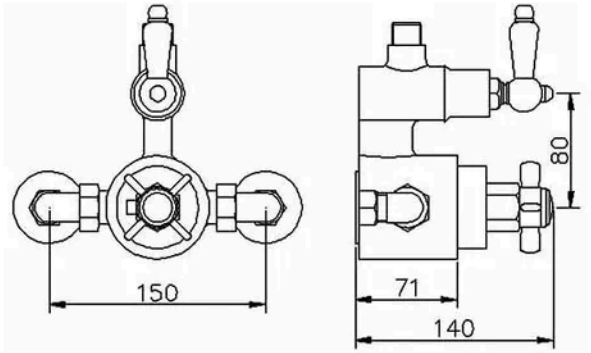

Product Dimensions

Product	140 x 150 x 140mm (H x W x D)
Packaged	165 x 180 x 270mm (H x W x D)
Nett Weight	3.17 kg
Packaged Weight	3.2 kg

Packaging Details

Box Qty	1
Label Size (mm)	50 x 100
Label Colour	White
Label Qty	2.0000

Product Details

Country of Origin	China
Product Material	Brass Abs
Control Type	Manual
WRAS Approved	No
Valve/Cartridge Type	1/4 Turn
Colour/Finish	Chrome
Mount Type	Surface/Wall
Style	Traditional
Handle Type	Crosshead/Lever
TMV2 Approved	No
TMV3 Approved	No
Pipe Centres	150
Handset Included	No
Head Included	Yes
Hose Included	Yes
Hose Length	1500 mm
Min Operating Pressure	0.1 Bar
No. Outlets	1.0000
Outlet Elbow Supplied	No
Valve / Cartridge Type	1/4 Turn

© ROXOR Group