Sales Code: A8118 **Barcode:** 5056462603445 **Brand:** Old London **Description:** Old London Brushed Brass Traditional Thermostatic Bar Shower Valve



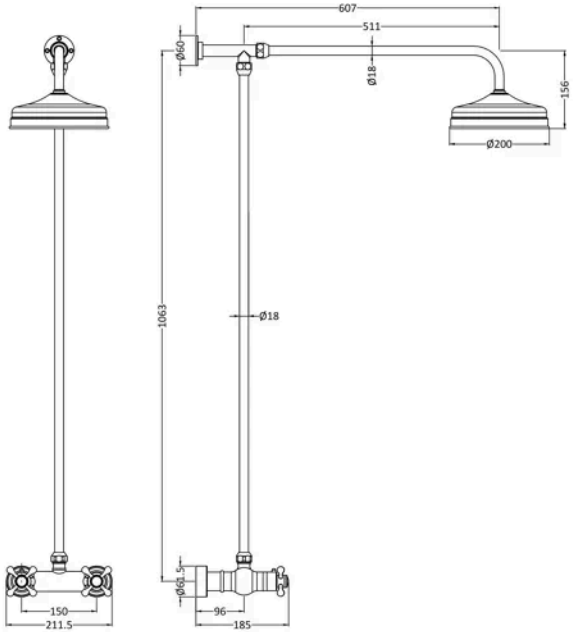

Product Dimensions

Product	1045 x 200 x 689mm (H x W x D)
Packaged	110 x 239 x 1014mm (H x W x D)
Nett Weight	5.2 kg
Packaged Weight	5.75 kg

Packaging Details

Label Size (mm)	50 x 100
Label Colour	White
Label Qty	1.0000

Product Details

Country of Origin	China
Product Material	Brass
Control Type	Manual
WRAS Approved	No
Valve/Cartridge Type	1/4 Turn
Colour/Finish	Brushed Brass
Mount Type	Wall Hung
Style	Traditional
Handle Type	Crosshead
Easy Clean	No
TMV2 Approved	No
TMV3 Approved	No
Pipe Size	18 mm
Pipe Centres	150
Handset Included	Yes
Head Included	Yes
Min Operating Pressure	0.5 Bar
No. Outlets	1.0000
Valve / Cartridge Type	1/4 Turn

© ROXOR Group