**Sales Code:** A3082 **Barcode:** 5055146179887 **Brand:** Hudson Reed **Description:** Hudson Reed Chrome 200mm Fixed Shower Head



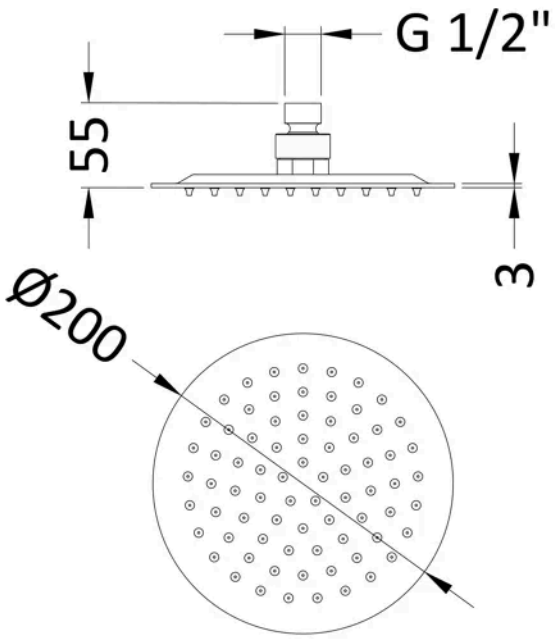


## Product Dimensions

| | |
|---|---|
| Product | 56 x 200 x 200mm (H x W x D) |
| Packaged | 210 x 100 x 210mm (H x W x D) |
| Outer Box | 430 x 500 x 230mm (H x W x D) |
| Nett Weight | 0.92 kg |
| Packaged Weight | 0.92 kg |

## Packaging Details

| | |
|---|---|
| Box Qty | 1 |
| Label Size (mm) | 50 x 100 |
| Label Colour | White |
| Label Qty | 2.0000 |

## Product Details

| | |
|---|---|
| Country of Origin | China |
| Product Material | Stainless Steel |
| Control Type | Not Applicable |
| WRAS Approved | No |
| Colour/Finish | Chrome |
| Mount Type | Surface/Wall |
| Style | Contemporary |
| TMV2 Approved | No |
| TMV3 Approved | No |
| Handset Included | No |
| Head Included | Yes |
| Min Operating Pressure | 0.5 Bar |
| No. Outlets | 1.0000 |
| Outlet Elbow Supplied | No |

© ROXOR Group