Sales Code: A3064 **Barcode:** 5055369044320 **Brand:** Hudson Reed **Description:** Hudson Reed Chrome Water Saving Shower Slide Rail Kit



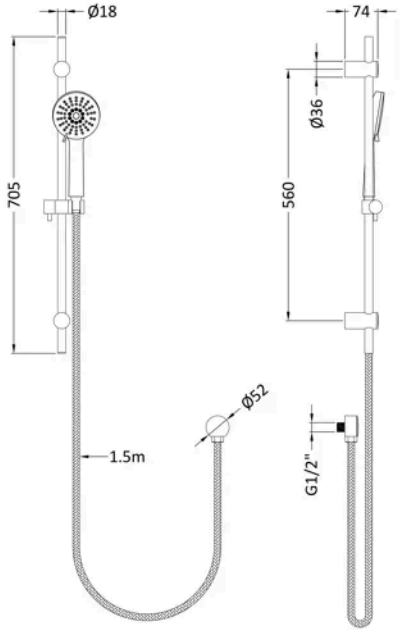

Product Dimensions

Product	705 x 74mm (H x D)
Packaged	95 x 154 x 725mm (H x W x D)
Outer Box	500 x 745 x 340mm (H x W x D)
Nett Weight	1.7 kg
Packaged Weight	1.7 kg

Packaging Details

Box Qty	1
Label Size (mm)	50 x 100
Label Colour	White
Label Qty	2.0000

Product Details

Country of Origin	United Kingdom
Product Material	Brass Abs
Control Type	Not Applicable
WRAS Approved	No
Colour/Finish	Chrome
Mount Type	Surface/Wall
Style	Contemporary
Easy Clean	Yes
TMV2 Approved	No
TMV3 Approved	No
Handset Included	Yes
Head Included	Yes
Hose Included	Yes
Hose Length	1500 mm
Min Operating Pressure	0.1 Bar
No. Outlets	1.0000
Outlet Elbow Supplied	Yes

© ROXOR Group