Sales Code: A3003 **Barcode:** 5055146120162 **Brand:** nuie **Description:** nuie Tec Pura Chrome Triple Thermostatic Shower Valve



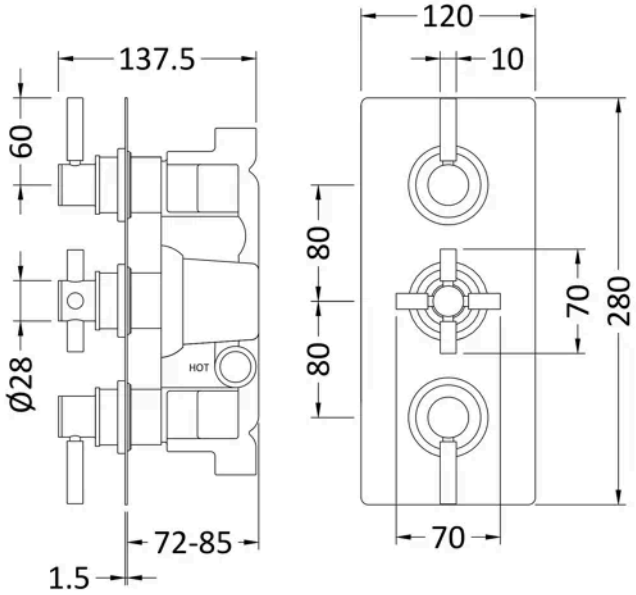

Product Dimensions

Product	280 x 80 x 136mm (H x W x D)
Packaged	110 x 250 x 320mm (H x W x D)
Outer Box	400 x 260 x 392mm (H x W x D)
Nett Weight	5.32 kg
Packaged Weight	5.32 kg

Packaging Details

Label Size (mm)	50 x 100
Label Colour	White
Label Qty	2.0000

Product Details

Country of Origin	China
Product Material	Brass Abs
Control Type	Manual
WRAS Approved	Yes
Valve/Cartridge Type	1/4 Turn
Colour/Finish	Chrome
Mount Type	Recessed/Wall
Style	Contemporary
Handle Type	Crosshead/Lever
TMV2 Approved	Yes
TMV3 Approved	No
Handset Included	No
Head Included	No
Min Operating Pressure	0.1 Bar
No. Outlets	2.0000
Outlet Elbow Supplied	No
Tmv2 Approval Number	2603035
Valve / Cartridge Type	1/4 Turn
Wras Approval No	250602040

© ROXOR Group