Sales Code: 9891001867 32WRAS **Barcode:** 5056474526879 **Brand:** Arley Pro **Description:** Arley Pro 1000 x 500mm 1.5 Bowl Stainless Steel Inset Sink & Tap Pack



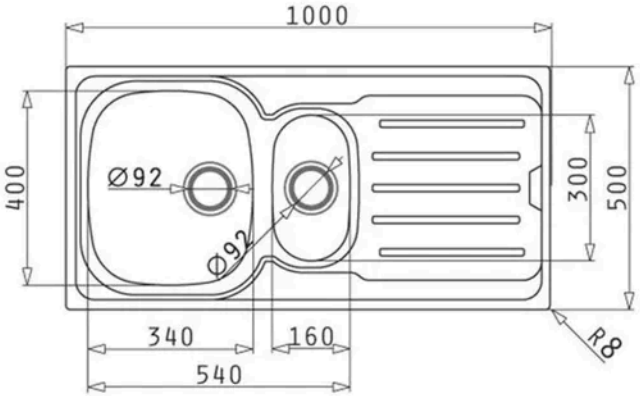

Product Dimensions

Product	8 x 1000 x 500mm (H x W x D)
Packaged	160 x 540 x 1040mm (H x W x D)
Nett Weight	6.1 kg
Packaged Weight	6.1 kg

Packaging Details

Box Qty	1

Product Details

Country of Origin	United Kingdom
Product Material	Stainless Steel
Colour/Finish	Silver
Style	Contemporary
No. Of Tapholes	1
Number Of Bowls	2
Overflow Included	Yes
Tap Included	Yes
Waste Included	No

© ROXOR Group