Sales Code: 989100186701 **Barcode:** 5056474561290 **Brand:** Pyramis **Description:** Pyramis Vera 1000 x 500mm Reversible 1.5 Bowl Stainless Steel Sink

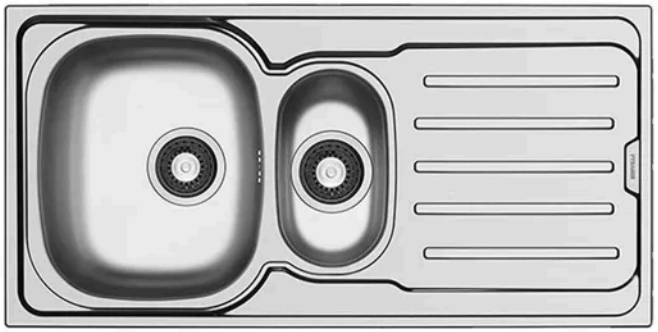

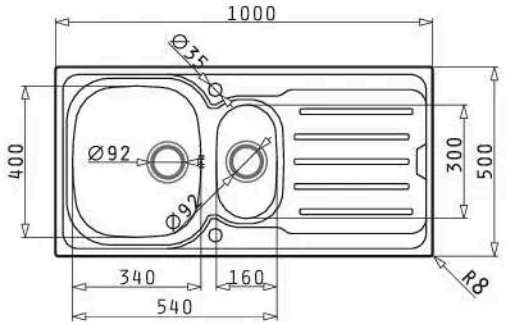

Product Dimensions

Product	190 x 500 x 150 x 1000mm (H x W x D x L)
Packaged	26 x 510 x 1010mm (H x W x D)
Nett Weight	6 kg
Packaged Weight	6 kg

Packaging Details

Box Qty	1

Product Details

Country of Origin	[gr]
Product Material	Stainless Steel
Colour/Finish	Silver
Style	Contemporary
Inner Bowl Height	180 mm
No. Of Tapholes	1
Number Of Bowls	2
Overflow Included	Yes
Sink Thickness	1 mm
Tap Included	No
Waste Included	No

© ROXOR Group