Sales Code: 989100132503 **Barcode:** 5056817767556 **Brand:** Pyramis **Description:** Pyramis Sparta 620 x 500mm Single Bowl Stainless Steel Sink



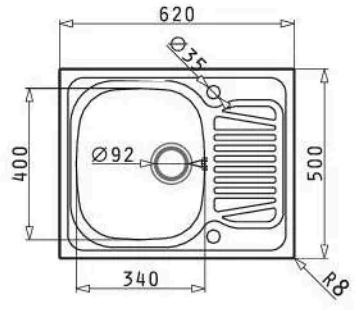

Product Dimensions

Product	150 x 500 x 150 x 620mm (H x W x D x L)
Packaged	150 x 530 x 650mm (H x W x D)
Nett Weight	2.69 kg
Packaged Weight	2.69 kg

Product Details

Country of Origin	[gr]
Product Material	Stainless Steel
Colour/Finish	Chrome
Style	Contemporary
Inner Bowl Height	140 mm
No. Of Tapholes	1
Number Of Bowls	1
Overflow Included	Yes
Tap Included	No
Waste Included	No

© ROXOR Group