Sales Code: 88210 **Barcode:** 5029067882102 **Brand:** Arley Pro **Description:** Arley Pro White Short D-Shaped Soft Close Toilet Seat With Bottom Fix Hinge



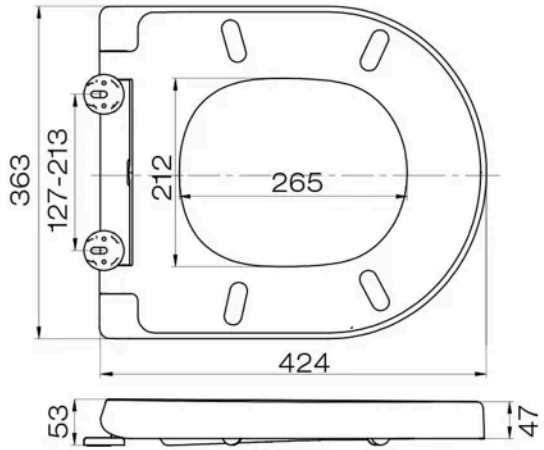

Product Dimensions

Product	53 x 363 x 424mm (H x W x D)
Nett Weight	2.47 kg
Packaged Weight	2.47 kg

Product Details

Country of Origin	United Kingdom
Product Material	Duroplast
Colour/Finish	White
Style	Contemporary
Hinge Centres (Max)	213 mm
Hinge Centres (Min)	127 mm
Toilet Seat Function	Soft Close
Toilet Seat Hinge Material	Stainless Steel
Toilet Seat Hinge Type	Bottom Fix
Toilet Seat Type	D Shape

© ROXOR Group