Sales Code: 835AT502-N **Barcode:** 5060394690404 **Brand:** Arley Pro **Description:** Arley Pro Comfort 450mm White Grab Rail - 18 inch



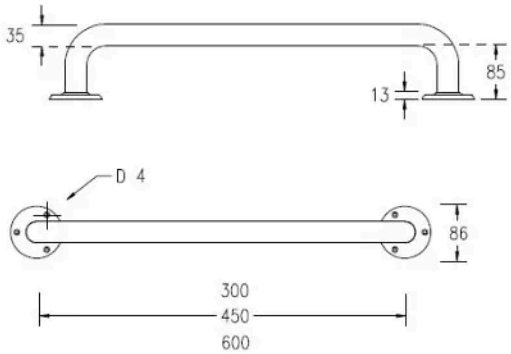

Product Dimensions

Product	120 x 538 x 85mm (H x W x D)
Packaged	470 x 410 x 800mm (H x W x D)
Nett Weight	1.01 kg
Packaged Weight	1.01 kg

Product Details

Country of Origin	United Kingdom
Product Material	Stainless Steel
Colour/Finish	White
Style	Contemporary

© ROXOR Group