Sales Code: 835AT501-N **Barcode:** 5060394690473 **Brand:** Arley Pro **Description:** Arley Pro Comfort 300mm White Grab Rail - 12 inch



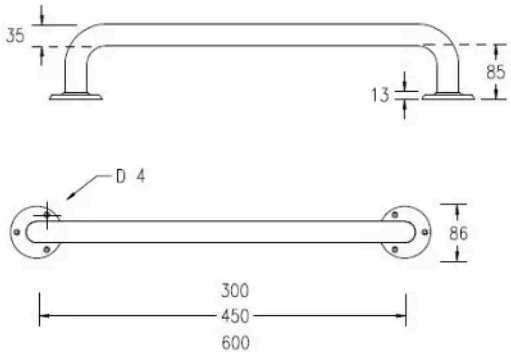

Product Dimensions

Product	85 x 387 x 120mm (H x W x D)
Packaged	500 x 700 x 800mm (H x W x D)
Nett Weight	1.01 kg
Packaged Weight	1.01 kg

Product Details

Country of Origin	United Kingdom
Product Material	Stainless Steel
Colour/Finish	White
Style	Contemporary

© ROXOR Group