Sales Code: 70020120547 **Barcode:** 5017134147414 **Brand:** Wirquin **Description:** Wirquin Celmac Uncranked Stainless Steel Toilet Seat Fitting

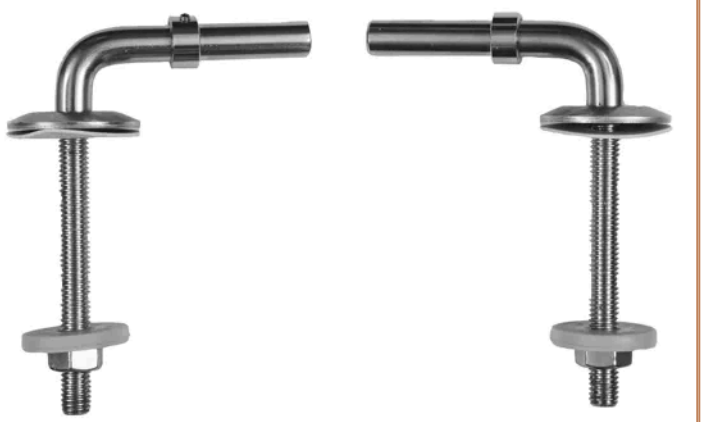

Technical Drawing Not Available

Product Dimensions

Product	280 x 190 x 40mm (H x W x D)
Nett Weight	1 kg
Packaged Weight	1 kg

Product Details

Country of Origin	United Kingdom
Product Material	Stainless Steel
Colour/Finish	Stainless Steel
Style	Contemporary

© ROXOR Group