Sales Code: 70010120694 **Barcode:** 5017134148886 **Brand:** Wirquin **Description:** Wirquin 1/2" Jollyfill Air Inlet Valve



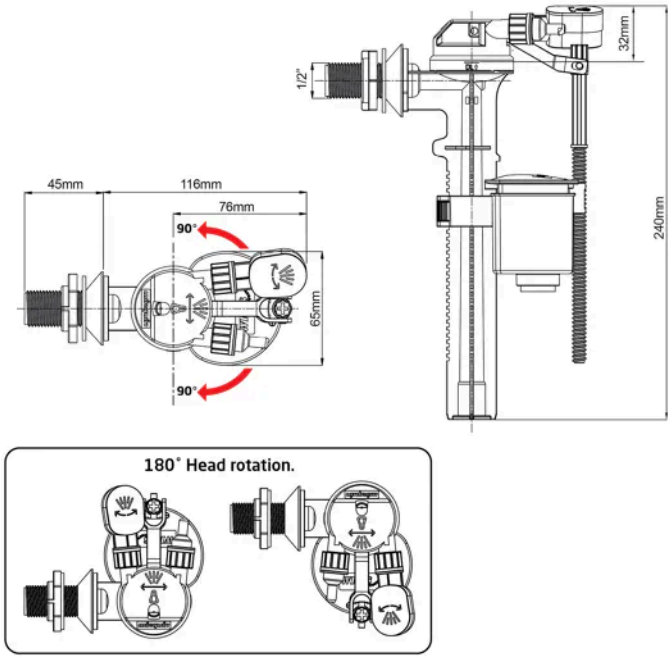

Product Dimensions

Product	245 x 170 x 70mm (H x W x D)
Nett Weight	0.2 kg
Packaged Weight	0.2 kg

Product Details

Country of Origin	United Kingdom
Product Material	Metal,Plastic
Colour/Finish	Grey
Style	Contemporary

© ROXOR Group