Sales Code: 238EXTBK-Q **Barcode:** 5056474597701 **Brand:** Arley Pro **Description:** Arley Pro Ralus 6 1900mm Matt Black Profile Extension Kit



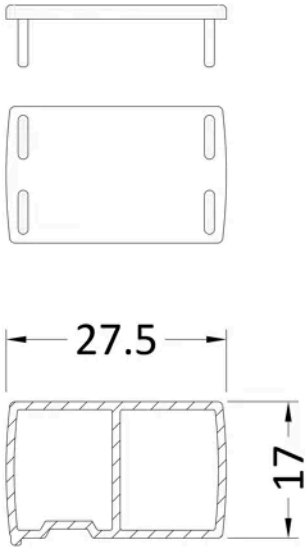

1900mm LENGTH

Product Dimensions

Product	1900 x 17 x 27mm (H x W x D)
Packaged	1960 x 60 x 60mm (H x W x D)
Nett Weight	2.5 kg
Packaged Weight	2.5 kg

Packaging Details

Box Qty	1
Label Size (mm)	52 x 100
Label Colour	White
Label Qty	1.0000

Product Details

Country of Origin	China
Product Material	Aluminium
Colour/Finish	Matt Black
Style	Contemporary

© ROXOR Group