Sales Code: 23812080FQBB-Q

Barcode: 5056474597329

Brand: Arley Pro

Description: Arley Pro Ralus 6 1200 x 800mm Brushed Brass 2 Door Offset Quadrant Enclosure



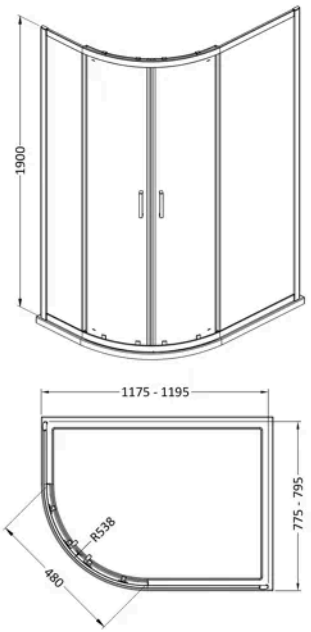

Product Dimensions

Product	1900 x 1180 x 780mm (H x W x D)
Packaged	1955 x 665 x 120mm (H x W x D)
Nett Weight	46.8 kg
Packaged Weight	46.8 kg

Packaging Details

Box Qty	1

Product Details

Country of Origin	China
Product Material	Aluminium
Colour/Finish	Brushed Brass
Style	Contemporary
Handle Type	Square T Shape
Fixings Included	Yes
Easy Clean	No
Adjustment Max	1175/1195
Adjustment Min	775/795
Ce Certified	Yes
Easy Fit	Yes
Enclosure Design	Framed
Entry Width	480 mm
Frame Finish	Brushed Brass
Glass Thickness	6 mm
Handle Material	ABS
Handles Included	Yes
No. Doors	2
Radius	538 mm
Wheel Type	Dual Quick Release

© ROXOR Group