Sales Code: 237TITWH400 **Barcode:** 5056474592911 **Brand:** Arley Pro **Description:** Arley Pro Kass Gloss White 400mm Wall Hung Basin With Unit



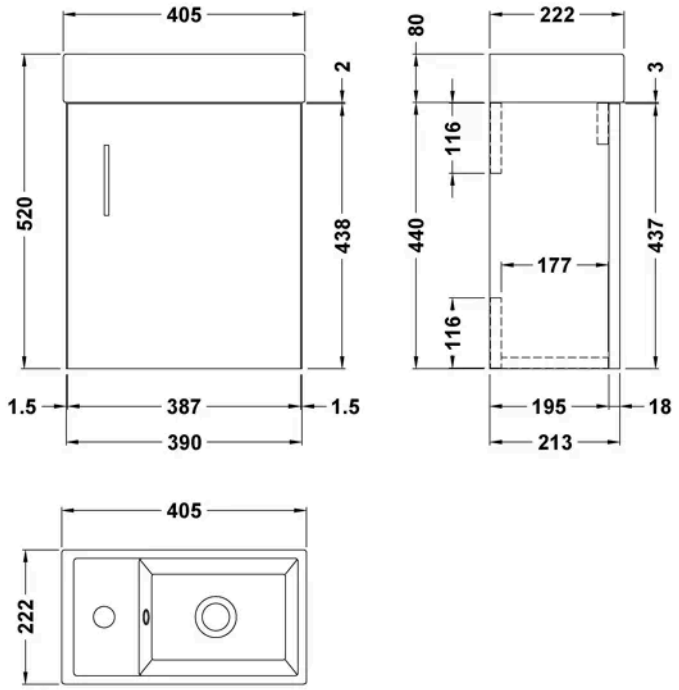

Product Dimensions

Product	520 x 405 x 222mm (H x W x D)
Packaged	465 x 245 x 410mm (H x W x D)
Nett Weight	12 kg
Packaged Weight	12.8 kg

Packaging Details

Box Qty	1

Product Details

Country of Origin	China
Product Material	Mfc Painted Gloss
Colour/Finish	Gloss White
Mount Type	Wall Hung
Style	Contemporary
Handle Type	Bar Handle
Construction Method	Cam & Wood Dowel
Ce Certified	No
Construction Type	Rigid
Fascia Finish	Mdf Painted Gloss
Fsc Certified	Yes
Handles Included	Yes
Inner Bowl Height	100 mm
Leg Set Included	No
Material Thickness	16 mm
No. Doors	1
No. Of Tapholes	1
No. Shelves	1
Number Of Bowls	1
Number Of Shelves	1
Overflow Included	Yes
Tap Included	No
Waste Included	No
Waste Shroud	No

© ROXOR Group