**Sales Code:** 237TITCN4002BSN **Barcode:** 5056474592942 **Brand:** Arley Pro **Description:** Arley Pro Kass Gloss White 600mm 2 Door Corner Standing Unit & Basin



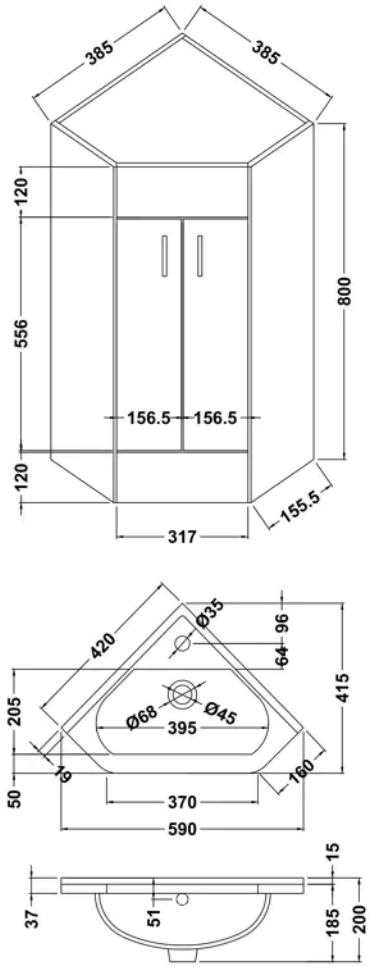


## Product Dimensions

| | |
|---|---|
| Product | 837 x 590 x 415mm (H x W x D) |
| Packaged | 840 x 410 x 560mm (H x W x D) |
| Nett Weight | 22.26 kg |
| Packaged Weight | 23.76 kg |

## Packaging Details

| | |
|---|---|
| Box Qty | 1 |

## Product Details

| | |
|---|---|
| Country of Origin | China |
| Product Material | Mfc Painted Gloss |
| Colour/Finish | Gloss White |
| Mount Type | Floor |
| Style | Contemporary |
| Handle Type | D Shape |
| Construction Method | Cam & Wood Dowel |
| Ce Certified | No |
| Construction Type | Rigid |
| Fascia Finish | Mdf Painted Gloss |
| Handles Included | Yes |
| Inner Bowl Height | 100 mm |
| Leg Set Included | No |
| Material Thickness | 16 mm |
| No. Doors | 2 |
| No. Of Tapholes | 1 |
| No. Shelves | 1 |
| Number Of Bowls | 1 |
| Number Of Shelves | 1 |
| Overflow Included | Yes |
| Tap Included | No |
| Waste Included | No |
| Waste Shroud | No |

© ROXOR Group