Sales Code: 237PBEP **Barcode:** 5056474593482 **Brand:** Arley Pro **Description:** Arley 725mm Acrylic B-Shaped Shower Bath End Panel



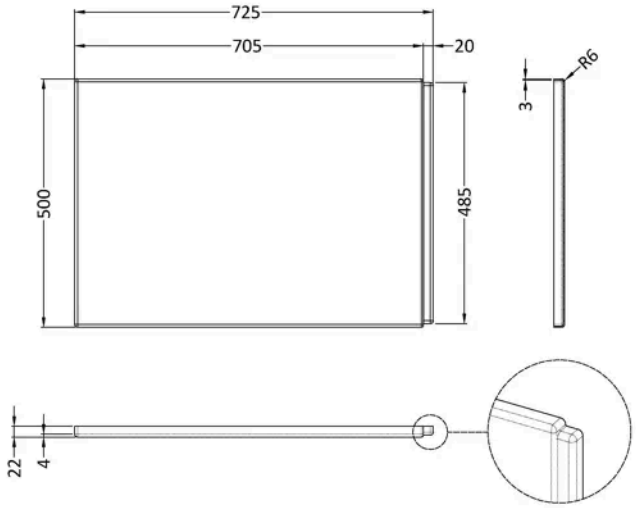

Product Dimensions

Product	500 x 725 x 26mm (H x W x D)
Packaged	30 x 520 x 900mm (H x W x D)
Nett Weight	1 kg
Packaged Weight	1 kg

Packaging Details

Box Qty	1

Product Details

Country of Origin	Turkey
Product Material	Acrylic
Colour/Finish	European White
Style	Contemporary
Fixings Included	Yes
Bath Panel Shape	Straight
Bath Panel Type	End Panel

© ROXOR Group