Sales Code: 237P16PL **Barcode:** 5056474593291 **Brand:** Arley Pro **Description:** Arley 1600mm Left Handed White P Shaped Bath & Side Panel



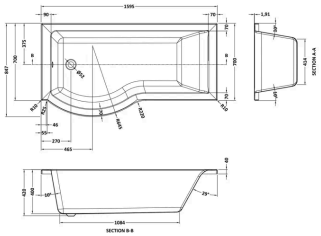

Product Dimensions

Product	420 x 847 x 420 x 1595mm (H x W x D x L)
Packaged	425 x 850 x 1800mm (H x W x D)
Nett Weight	19.5 kg
Packaged Weight	19.5 kg

Packaging Details

Box Qty	2

Product Details

Volume	190 Litre
Country of Origin	Turkey
Product Material	Acrylic
Colour/Finish	White
Style	Contemporary
Fixings Included	No
Bath Panel Included	No
Ce Certified	Yes
Displaced Capacity	120 Litre
Includes Grips	No
Leg Set Included	Yes
No. Of Tapholes	No Tapholes
Overflow Included	No
Tap Included	No
Waste Included	No

© ROXOR Group

Sales Code: 237P16L **Barcode:** 5056462696881 **Brand:** Arley Pro **Description:** Arley 1600mm Left Handed P-Bath



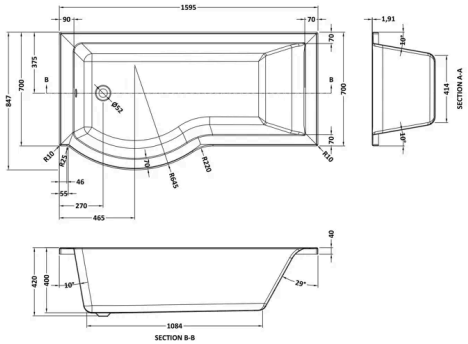

Product Dimensions

Product	415 x 850 x 1600mm (H x W x L)
Packaged	425 x 850 x 1600mm (H x W x D)
Nett Weight	17.5 kg
Packaged Weight	17.5 kg

Packaging Details

Box Qty	1
Label Size (mm)	35 x 300
Label Colour	White
Label Qty	2.0000

Product Details

Volume	200 Litre
Country of Origin	Egypt
Product Material	Acrylic
Colour/Finish	White
Style	Contemporary
Fixings Included	No
Bath Panel Included	No
Ce Certified	Yes
Displaced Capacity	130 Litre
Includes Grips	No
Leg Set Included	No
No. Of Tapholes	No Tapholes
Overflow Included	No
Tap Included	No
Waste Included	No

© ROXOR Group

Sales Code: 237PP16 **Barcode:** 5056474593079 **Brand:** Arley Pro **Description:** Arley 1600mm P Shape Front Bath Panel

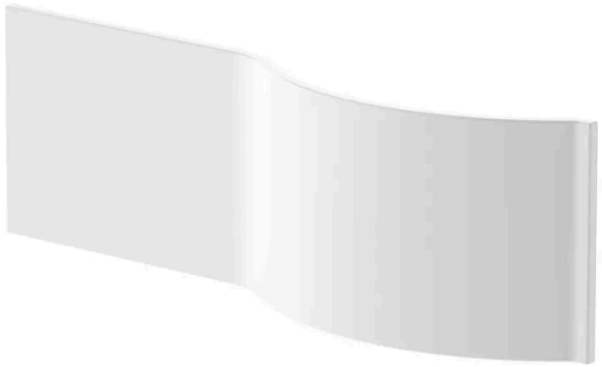

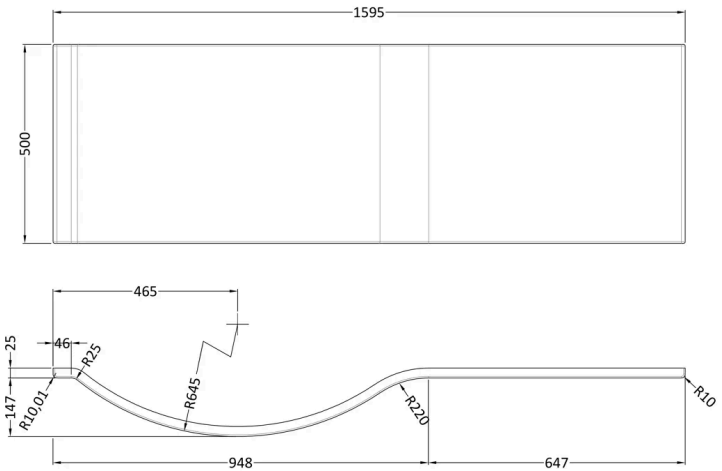

Product Dimensions

Product	500 x 1595 x 30mm (H x W x D)
Packaged	30 x 520 x 1600mm (H x W x D)
Nett Weight	2 kg
Packaged Weight	2 kg

Packaging Details

Box Qty	1

Product Details

Country of Origin	Turkey
Product Material	Acrylic
Colour/Finish	White
Style	Contemporary

© ROXOR Group