Sales Code: 237L17PR **Barcode:** 5056474593406 **Brand:** Arley Pro **Description:** Arley Pro 1700mm L-Shaped Right-Hand Shower Bath & Side Panel



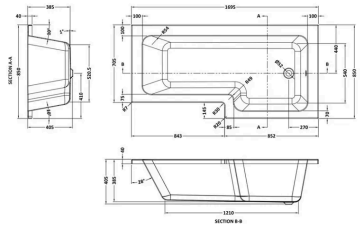

Product Dimensions

Product	390 x 850 x 1700mm (H x W x L)
Packaged	425 x 850 x 1800mm (H x W x D)
Nett Weight	27.9 kg
Packaged Weight	27.9 kg

Packaging Details

Box Qty	2
Label Colour	White

Product Details

Volume	235 Litre
Country of Origin	Turkey
Product Material	Acrylic
Colour/Finish	White
Style	Contemporary
Fixings Included	No
Bath Panel Included	No
Ce Certified	Yes
Declaration Of Performance	No
Displaced Capacity	165 Litre
Includes Grips	No
Leg Set Included	Yes
No. Of Tapholes	No Tapholes
Overflow Included	Yes
Tap Included	No
Ukca Certified	No
Waste Included	No

© ROXOR Group

Sales Code: 237L17R **Barcode:** 5056474593154 **Brand:** Arley Pro **Description:** L SQUARE SHOWER BATH RH 1700x850x700x585

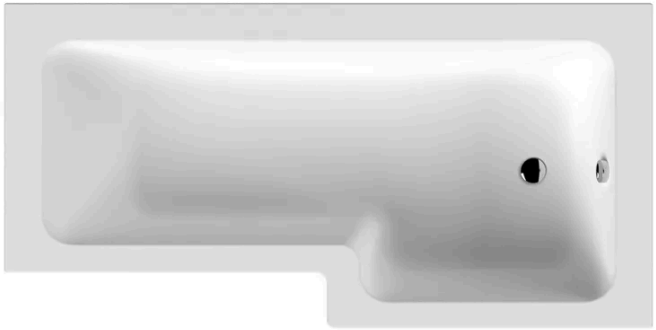

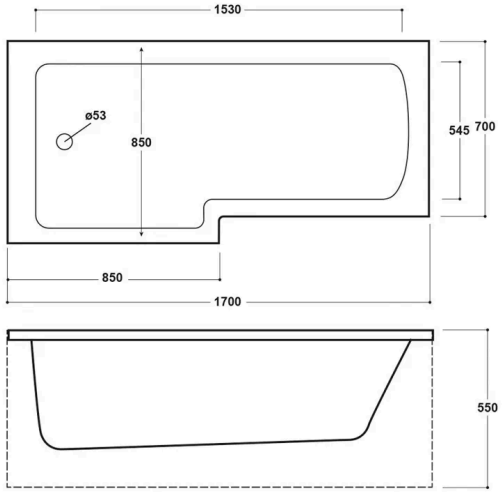

Product Dimensions

Product	400 x 855 x 1695mm (H x W x L)
Packaged	425 x 850 x 1700mm (H x W x D)
Nett Weight	24.5 kg
Packaged Weight	24.5 kg

Packaging Details

Box Qty	1
Label Size (mm)	35 x 300
Label Colour	White
Label Qty	2.0000

Product Details

Volume	235 Litre
Country of Origin	Egypt
Product Material	Acrylic
Colour/Finish	White
Style	Contemporary
Fixings Included	No
Bath Panel Included	No
Ce Certified	Yes
Declaration Of Performance	Yes
Displaced Capacity	165 Litre
Includes Grips	No
Leg Set Included	No
No. Of Tapholes	No Tapholes
Overflow Included	No
Tap Included	No
Ukca Certified	Yes
Waste Included	No

© ROXOR Group

Sales Code: 237LP17 **Barcode:** 5056474593048 **Brand:** Arley Pro **Description:** Arley 1700mm L Shaped Front Panel

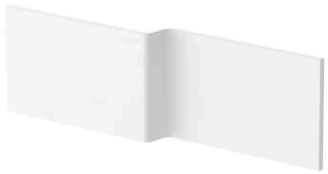

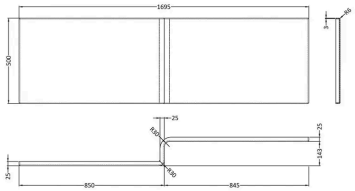

Product Dimensions

Product	500 x 515 x 5 x 1695mm (H x W x D x L)
Packaged	35 x 515 x 1720mm (H x W x D)
Nett Weight	3.4 kg
Packaged Weight	3.4 kg

Packaging Details

Box Qty	1

Product Details

Country of Origin	Turkey
Product Material	Acrylic
Colour/Finish	White
Style	Contemporary
Fixings Included	No
Bath Panel Shape	Square
Bath Panel Type	Front Panel

© ROXOR Group