Sales Code: 237HFTS51SW

Barcode: 5056883730096

Brand: Halite

Description: Halite Salona Satin White 500mm 2 Door Floor Standing Vanity Unit With Thin-Edge Basin



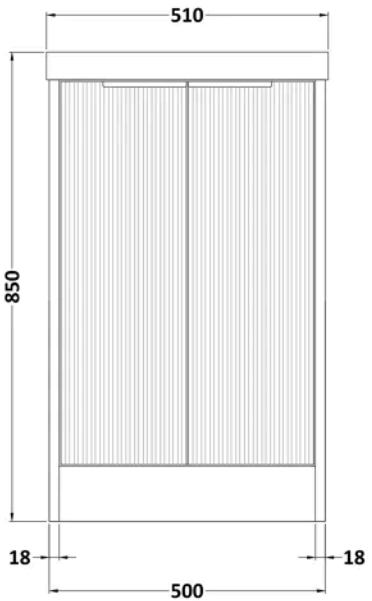

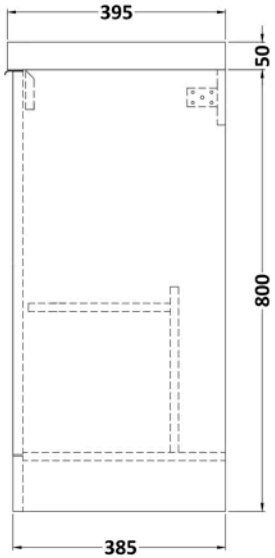

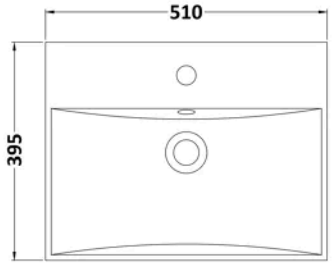

Product Dimensions

Product	850 x 510 x 395mm (H x W x D)
Packaged	830 x 540 x 405mm (H x W x D)
Nett Weight	30.82 kg
Packaged Weight	30.82 kg

Product Details

Country of Origin	China
Product Material	Polyurea,Pvc,Vitreous China
Colour/Finish	Satin White
Mount Type	Floor
Style	Contemporary
Construction Method	Cam & Wood Dowel
Ce Certified	Yes
Construction Type	Rigid
Declaration Of Performance	Yes
Fascia Finish	PVC
Fsc Certified	Yes
Handles Included	Yes
Inner Bowl Height	125 mm
Material Thickness	18 mm
No. Doors	2
No. Of Tapholes	1
No. Shelves	1
Number Of Bowls	1
Number Of Shelves	1
Overflow Cover Included	Yes
Overflow Included	Yes
Tap Included	No
Ukca Certified	Yes

© ROXOR Group

Sales Code: 237HFT50TEB **Barcode:** 5056883729991 **Brand:** Arley Pro **Description:** Halite 1 Tap Hole 500mm Thin Edge Ceramic Basin



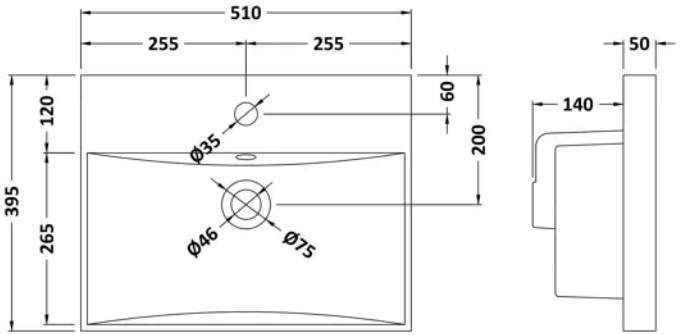

Product Dimensions

Product	190 x 510 x 395mm (H x W x D)
Packaged	190 x 530 x 415mm (H x W x D)
Nett Weight	9.5 kg
Packaged Weight	10 kg

Packaging Details

Box Qty	1

Product Details

Country of Origin	China
Product Material	Vitreous China
Colour/Finish	White
Style	Contemporary
Ce Certified	Yes
Inner Bowl Height	125 mm
No. Of Tapholes	1
Number Of Bowls	1
Overflow Included	Yes
Tap Included	No
Waste Included	No

© ROXOR Group

Sales Code: 237HFTHF150CR **Barcode:** 5056883729892 **Brand:** Arley Pro **Description:** Halite 150mm Chrome Finger Pull Handle

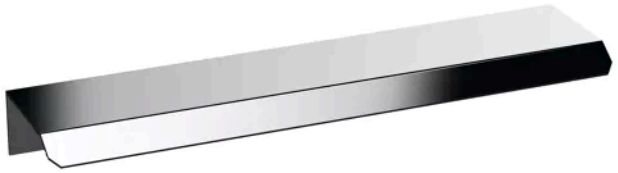

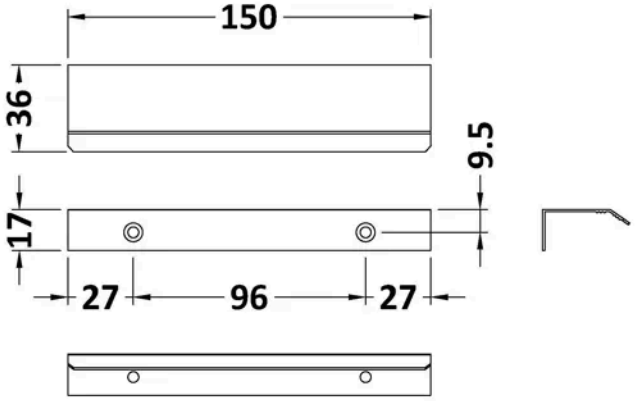

Product Dimensions

Product	17 x 150 x 36mm (H x W x D)
Packaged	30 x 20 x 150mm (H x W x D)
Nett Weight	0.02 kg
Packaged Weight	0.02 kg

Packaging Details

Box Qty	1
Label Size (mm)	50 x 100
Label Colour	White
Label Qty	1.0000

Product Details

Country of Origin	China
Product Material	Aluminium
Colour/Finish	Chrome
Style	Contemporary
Handle Type	Finger Pull
Fixings Included	Yes

© ROXOR Group

Sales Code: 237HFTS5FDRSW-W **Barcode:** 5056883729762 **Brand:** Halite **Description:** Halite Salona 500mm Satin White 2 Door Floor Standing Vanity Unit



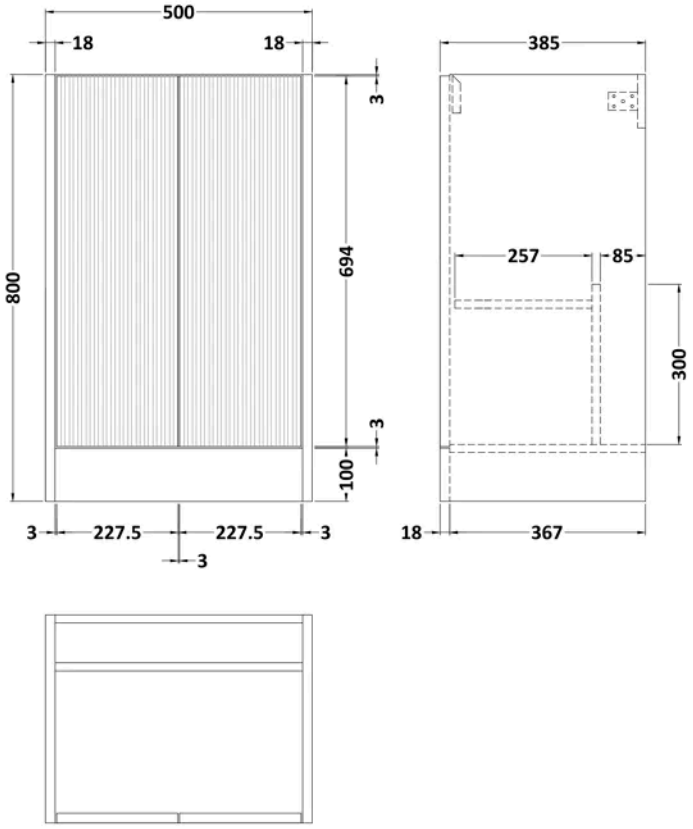

Product Dimensions

Product	800 x 500 x 385mm (H x W x D)
Packaged	860 x 560 x 450mm (H x W x D)
Nett Weight	18.4 kg
Packaged Weight	18.9 kg

Packaging Details

Box Qty	1

Product Details

Country of Origin	China
Product Material	Polyurea,Pvc
Colour/Finish	Satin White
Mount Type	Floor
Style	Contemporary
Construction Method	Cam & Wood Dowel
Ce Certified	Yes
Construction Type	Rigid
Fascia Finish	PVC
Fsc Certified	Yes
Handles Included	No
Material Thickness	18 mm
No. Doors	2
No. Shelves	1
Number Of Shelves	1
Ukca Certified	Yes
Waste Shroud	No

© ROXOR Group