Sales Code: 237HFTL82SW **Barcode:** 5056883730089 **Brand:** Halite **Description:** Halite Larisa Satin White 800mm 2 Drawer Wall Hung Vanity Unit With Curved Basin



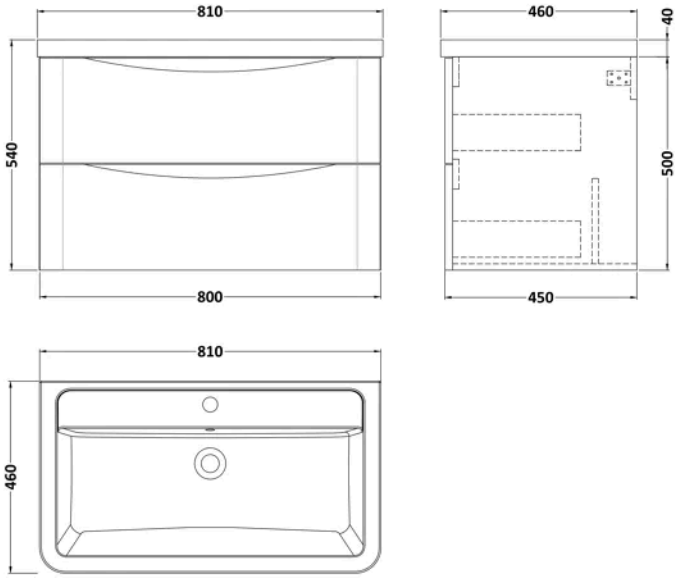

Product Dimensions

Product	540 x 810 x 460mm (H x W x D)
Packaged	540 x 840 x 490mm (H x W x D)
Nett Weight	42.02 kg
Packaged Weight	42.02 kg

Product Details

Country of Origin	China
Product Material	Polyurea,Pvc,Vitreous China
Colour/Finish	Satin White
Mount Type	Wall Hung
Style	Contemporary
Construction Method	Cam & Wood Dowel
Ce Certified	Yes
Construction Type	Rigid
Declaration Of Performance	Yes
Drawer Type	80mm High Metal S/C Inc Gallery
Fascia Finish	PVC
Fsc Certified	Yes
Handles Included	No
Inner Bowl Height	105 mm
Material Thickness	18 mm
No. Drawers	2
No. Of Tapholes	1
Number Of Bowls	1
Overflow Cover Included	Yes
Overflow Included	Yes
Tap Included	No
Ukca Certified	Yes

© ROXOR Group

Sales Code: 237HFT80CB **Barcode:** 5056883730034 **Brand:** Arley Pro **Description:** Ceramic Basin 810x460



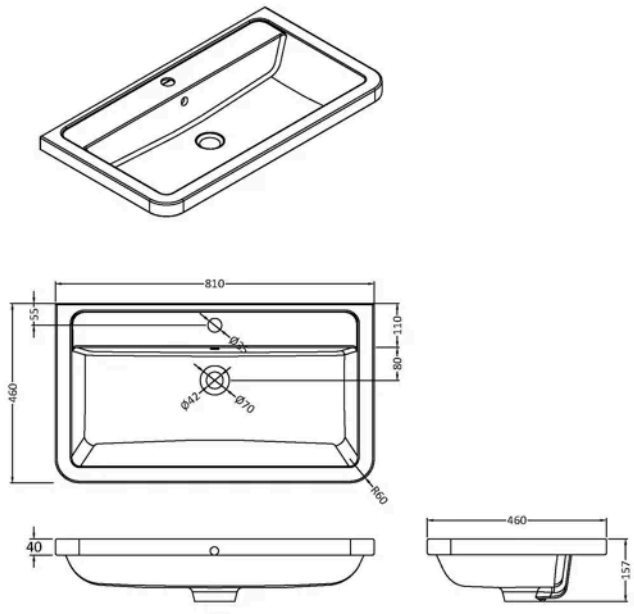

Product Dimensions

Product	450 x 800 x 157mm (H x W x D)
Packaged	167 x 840 x 470mm (H x W x D)
Nett Weight	18.12 kg
Packaged Weight	18.12 kg

Packaging Details

Box Qty	1

Product Details

Country of Origin	China
Product Material	Vitreous China
Colour/Finish	White
Style	Contemporary
Ce Certified	Yes
Inner Bowl Height	105 mm
No. Of Tapholes	1
Number Of Bowls	1
Overflow Included	Yes
Tap Included	No
Waste Included	No

© ROXOR Group

Sales Code: 237HFTL8WDWSW-W **Barcode:** 5056883729755 **Brand:** Halite **Description:** Halite Larisa 800mm Satin White 2 Drawer Wall Hung Vanity Unit



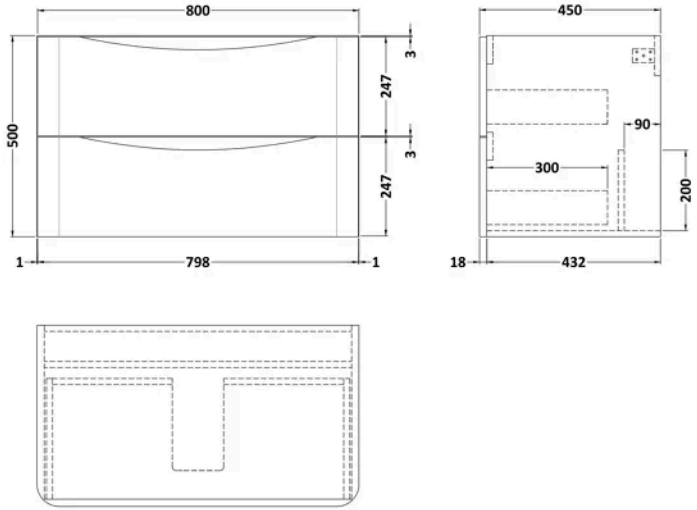

Product Dimensions

Product	500 x 800 x 450mm (H x W x D)
Packaged	560 x 860 x 510mm (H x W x D)
Nett Weight	23.4 kg
Packaged Weight	23.9 kg

Packaging Details

Box Qty	1

Product Details

Country of Origin	China
Product Material	Polyurea,Pvc
Colour/Finish	Satin White
Mount Type	Wall Hung
Style	Contemporary
Construction Method	Cam & Wood Dowel
Ce Certified	Yes
Construction Type	Rigid
Drawer Type	80mm High Metal S/C Inc Gallery
Fascia Finish	PVC
Fsc Certified	Yes
Handles Included	No
Material Thickness	18 mm
No. Drawers	2
Ukca Certified	Yes
Waste Shroud	Yes

© ROXOR Group